ENGINEERING REPORT

CITY OF ESTACADA

WATER SYSTEM MASTER PLANNING UPDATE

WATER MANAGEMENT & CONSERVATION PLAN

WATER SYSTEM DEVELOPMENT CHARGE UPDATE

Clackamas County, Oregon

Adopted February, 2010

March, 2008

CURRAN-McLEOD, INC., Consulting Engineers
6655 SW Hampton Street, Suite 210
Portland, OR 97223

CITY OF ESTACADA

Clackamas County, Oregon

WATER SYSTEM MASTER PLANNING UPDATE

♦

WATER MANAGEMENT & CONSERVATION PLAN

♦

WATER SYSTEM DEVELOPMENT CHARGE UPDATE

REGISTERED PROFESSIONAL ENGINEER
11529
OREGON
APR 29, 1982
CURTIS J. McLEOD
Exp 12/08

March 2008

CURRAN-McLEOD, INC. Consulting Engineers
6655 SW Hampton Street, Suite 210
Portland, Oregon 97223

City of Estacada
Table of Contents

WATER SYSTEM MASTER PLAN UPDATE:

I. INTRODUCTION 1

II. PLANNING CRITERIA 2
- A. Planning Horizon 2
- B. Population Projections 2
- C. Demand Projections 3
- D. Demand Projections with Lumber Mill Offline 6

III. EXISTING WATER SYSTEM OVERVIEW 8
- A. Raw Water Supply 8
- B. Water Treatment Facility 8
- C. Distribution System 9
- D. Storage Systems 10

IV. FACILITIES EVALUATION 12
- A. Water Source 12
  - 1. Existing Water Rights 13
  - 2. Timothy Lake Stored Water 13
  - 3. Groundwater Resources 14
  - 4. Hydropower Water Rights 14
  - 5. Reclaimed Water / Exchange of Water 15
- B. Source Pumping Systems 16
- C. Water Treatment 16
- D. Finished Water Storage 19
- E. Distribution System 20

V. CAPITOL IMPROVEMENT PLANNING 22
- A. Source Improvements 22
- B. Treatment Plant Improvements 22
- C. Storage Improvements 24
- D. Distribution System Improvements 25
- E. Capital Improvement Plan Summary 26

VI. PROJECT FUNDING 27
- A. Monthly Rates 27
- B. System Development Charges 27

VII. REGULATORY REQUIREMENTS 29
A. General 29
B. Responsibilities of Water Suppliers 29
C. Treatment 30
D. Chemical, Physical and Microbiological Contaminant Levels 30
E. Sampling and Analytical Requirements 31
F. Reporting and Record Keeping 32
G. Future Regulatory Requirements 32

FIGURES

Figure 1 Treatment Facility Layout 8a
Figure 2 Water Distribution System 9a
Figure 3 Distribution System Service Pressure Zones 9b

APPENDICES

Appendix A EPA National Primary Drinking Water Standards
Appendix B Reporting and Record keeping Requirements
Appendix C Index of Abbreviations

WATER MANAGEMENT AND CONSERVATION PLAN:

EXECUTIVE SUMMARY i

I. INTRODUCTION 1
A. Overview 1
B. Plan Organization 1
C. Affected Local Government 1
D. Plan Update Schedule 1
E. Time Extension 2

II. WATER SUPPLIER DESCRIPTION 2
A. Source - OAR 690-086-0140 (1) 2
B. Interconnections with Other Systems - OAR 690-086-0140 (7) 2
C. Service Area Description - OAR 690-086-0140 (2) 2
D. Records of Water Use - OAR 690-086-0140(4) & (9) 3
E. Customer Characteristics and Use Patterns - OAR 690-086-0140 (6) 5
F. City Water Rights - OAR 690-086-0140 (5) 5
G. System Description 7

III. WATER CONSERVATION 9
A. Current Conservation Measures - OAR 690-086-0150 (1) & (3) 9
B. Use and Reporting - OAR 690-086-0150 (2) 9
C. Required Conservation Programs - OAR 690-086-0150 (4) 9
D. Expanded Use Under Extended Permits - OAR 690-086-0150 (5) & (6) 10

IV. CURTAILMENT 10
A. Historical Supply Deficiencies - OAR 690-086-0160 (1) 11
B. Curtailment Stages - OAT 690-086-0160 (2), (3), & (4) 11

V. WATER SUPPLY 14
A. Delineation of Service Area - OAR 690-086-0170 (1) 14
B. Water Supply Demand Estimates & Comparison of Projected Needs to Available Sources - OAR 690-086-0170 (2), (3), & (4) 14
C. Expansion of Existing Rights - OAR 690-086-0170 (5), (6), & (7) 16
D. Acquisition of New Rights - OAR 690-086-0170 (8) 16

WATER SYSTEM DEVELOPMENT CHARGE UPDATE:

I. OVERVIEW 1

II. CITY WIDE SDC METHODOLOGY 1

III. SDC OVERLAY METHODOLOGY 2

IV. WATERLINE CONSTRUCTION CREDITS 3

V. WATER SYSTEM CAPITAL IMPROVEMENT PLAN 4

VI. SDC IMPROVEMENT FEE CALCUKATION 6

VII. SDC REIMBURSEMENT FEE CALCULATION 6

VIII. SDC FEE SUMMARY 8

City of Estacada
WATER SYSTEM MASTER PLAN UPDATE
January 2008

I. INTRODUCTION

The State of Oregon, Department of Human Services, Drinking Water Program requires all community water systems with more than 300 services to maintain a current water system master plan (OAR 333-061-0060(5)). Plans are recommended to be updated every five years, must be prepared by a professional engineer registered in the state of Oregon, and submitted to the Drinking Water Program for review and approval.

A Water System Master Plan for the City of Estacada was completed in 1972 in the Water System Study by CH2MHill, and updated in 1993 by KCM, Inc. The more recent document had a planning window that extended 20 years to the year 2013, and identified a Capitol Improvements Program needed to maintain an uninterrupted water supply to the customer base. Over the past 13 years the City has implemented many of the needed improvements, and maintains sufficient system capacity to meet peak demands.

In 2006 the City of Estacada commissioned CURRAN-McLEOD, INC. Consulting Engineers to update the Water System Master Plan. The scope of work for this plan includes; an evaluation of the existing domestic water system, including source, treatment, storage and distribution systems; identifying potential deficiencies of these systems for current and projected future needs and; identifying engineering alternatives for system expansion in order to meet anticipated growth.

This plan is intended to update the efforts of the 1993 Water System Master Plan by KCM, Inc. The projected 2027 maximum day demand generated in this update is less than the high estimates contained in the 1993 Master Plan for the year 2013. As a result, many of the projections, recommendations and information in the 1993 Plan remain pertinent and valid, and the document is incorporated by reference into this update.

In addition to maintaining a current Water System Master Plan, a Water Management and Conservation Plan must be prepared in conjunction with any water rights actions. This document addresses the need for long term efficient water use, and promotes water reuse and conservation efforts to help meet future demands. To meet the fifty year demand projections, additional water rights must be acquired.

II. PLANNING CRITERIA

1. Planning Horizon

State planning guidelines recommend a minimum of a twenty year period for evaluation of future water system needs. This study will project the needs for treatment, distribution and storage system improvements to serve the projected twenty year population for the City of Estacada. Each of these components of the water system is limited only by available funding.

Source development is much more critical in that it is not only limited by funding, but is also dependent upon adequate natural resources to meet demands. As a result, the planning period for source development in this update is through the year 2050. Projecting source development further into the future will allow the City more time to develop the critical natural resources needed to meet long term demands.

2. Population Projections

The 1972 Water System Study document projected City growth at a rate of 2.25% per annum, and predicted a population of 1,840 for the year 1990. The City population in 1990 was actually 2018, which was greater than estimated by approximately 178 people.

The 1993 Water System Master Plan projected City growth based on three scenarios: 1%, 2.5%, and 5% growth rates. Under these scenarios the projected 2005 populations were 2,299, 2,785, and 3,809 respectively. Actual City population in the year 2005 was 2,480 as published by the Population Research Center at Portland State University. Growth within the City of Estacada has varied from less than 1% (from 2000 to 2005) to greater than 3.5% (between 1980 and 1990). Average annual growth between 1990 and 2005 has been slightly over 1.3% .

The City of Estacada has observed a dramatic increase in the development of residential home sites in the past few years. Currently the City has over 1,500 residential lots in the planning or constructions stage throughout the area. Although the City has yet to see a substantial number of building permit requests, the infrastructure is in place to support a substantial population increase.

Based on the potential of a substantial increase in lot sales, and the proximity to the Portland Metropolitan Urban Growth Boundary, a higher than historical growth rate is warranted. In 2006, the Estacada City Council adopted a projected growth rate of 3% per year for the City's planning documents. A 3% growth rate has been incorporated into the projections in this update.

The following table identifies existing and projected City population based on a 3% growth rate through the year 2050:

Table 1. City of Estacada
Population Projections at 3% Per Year

Year	Projected Population
2003*	2,440
2004*	2,450
2005*	2,480
2006*	2,580
2007*	**2,695**
2008	2,776
2009	2,859
2010	2,945
2015	3,414
2020	3,958
2025	4,588
2027	**4,867**
2030	5,319
2035	6,166
2040	7,148
2045	8,287
2050	9,606

* Per Portland State University Population Research Center

3. Demand Projections

In 2006 there were approximately 892 connections to the Estacada water distribution system, with a population of 2,580. There are also numerous small and medium businesses as well as industrial and institutional demands which are included in the total production records for the water system.

In order to quantify and evaluate the demands placed on the system, all water production is allocated to the residential population in this planning update. As a result, each design criteria, i.e. average day demand and peak day demand, has a component of water demand that accounts for the commercial, industrial and institutional demands on the system as well as a proportionate share of the residential demands. This approximation is accurate for projecting future demands assuming the future proportion of commercial, industrial and institutional demands remain in the same proportion as today. If a substantial non-residential use is terminated, or if the proportion of residential demands varies, the design criteria used to project all future demands may warrant reevaluation.

Water source and treatment projections are based on the ability to meet the peak day demands. Distribution and storage system design criteria are based on the ability to meet fire flow demands superimposed on peak day demands to account for the worst case scenario.

Water demand projections have been made in the 2 previous planning documents based on recorded data. The 1972 Water System Study evaluated metered data from 1969 and 1970 to quantify the per capita demands. Including commercial, institutional and industrial demands, the maximum day system demand was 618 gallons per capita per day (gpcd).

In the 1993 Water System Master Plan, demands were evaluated based on meter readings from 1989 to 1992. The plan concluded that due to the wide variation in demand, peak day demands were projected to be between a low of 424 gpcd to a high of 524 gpcd. The four year average maximum day system demand was 468 gpcd, a reduction of 150 gpcd from 1972 data.

For this Master Plan Update, the City's overall water use has been evaluated using the water treatment plant meter records from 2003 through 2006. Annual usage in 2004 and 2005 was significantly greater than in any previous year and was greater than the recorded demands in 2006. A substantial leak in the system began in late 2003/early 2004 and was repaired in late 2005. A summary of monthly water production is shown in Table 2.

Table 2. City of Estacada
Monthly Water Production (MG)

Month	2003	2004	2005	2006
January	15.39	16.93	18.59	16.86
February	14.54	15.83	16.08	15.44
March	15.05	18.86	18.86	14.98
April	13.74	16.79	18.00	15.53
May	14.05	17.71	19.34	17.80
June	18.47	19.30	19.53	19.35
July	24.76	25.65	24.48	25.56
August	25.53	24.03	27.07	25.04
September	20.51	18.08	22.56	20.52
October	18.34	17.95	17.95	17.23
November	16.67	17.77	17.42	13.73
December	17.04	17.67	18.87	17.21
TOTAL	**214.09**	**226.58**	**238.75**	**219.24**

In 2006 the City had an annual average demand of 601,000 gallons per day. The monthly average summer demand was 676,500 gallons per day and the peak monthly summer demand was 838,000 gallons per day. The peak day of record was 1,161,000 gallons in July. However, the day prior to and after that peak day were significantly lower, indicating a possible anomaly in the reading, most likely in the time of day the reading was taken.

Typically, peak day demands have an associated ramping up period over the course of several days before and after a peaking event. The City Fire Department has indicated that no significant burn events took place on the recorded peak day, and the City does not have a record of any other significant usage events that day. For these reasons the peak day was considered anomalous and the next peak day demand of 1,057,000 gallons (measured in June) was taken as more representative of a peak day demand for 2006.

A summary of production from the water system for the 2003 through 2006 is presented in Table 3 below.

Table 3. City of Estacada
Water System Production Summary

Year	Total Production (MG)	Per Capita Average Day Demand (gpcd)	Max Month (MG)	Per Capita Max Month (gpcd)	Peak Day (MG)	Per Capita Peak Day (gpcd)	Peak Day Peaking Factor
2003	214.09	240	25.53	349	1.097	450	1.87
2004	226.58	253	25.65	349	1.131	462	1.82
2005	238.75	264	27.07	364	1.115	450	1.70
2006	219.24	233	25.56	330	1.057	410	1.76
Four Year Average		248	25.95	348	1.100	443	1.79

The measured water volumes presented do not represent the individual customer metered usage, but rather the metered daily production records of the treatment plant. The meter is located after the high service pumps and prior to entering the distribution system. Readings include all losses in the system, including backwashing of the treatment equipment and leakage.

Similar to the 1993 Water System Master Plan, the demands include all commercial and industrial water use. In order to maintain an accurate correlation, the figures used for projecting demands assume that the proportion of commercial/industrial demands maintains its relative proportion to total water demands.

Water meter readings confirm that the significant leak in the system was repaired in late 2005. Water consumption decreased from 2005 to 2006 by as much as 10% on average day demands. Given that the leak repair was completed prior to 2006 and provided immediate demand reductions, using 2006 data only, although limited, provides a more accurate representation of projected demands to the system.

Water losses are also high ranging from 16 to 20 percent in the winter to as high as 30 percent in the summer. Water conservation efforts will require the City continue to locate and repair leakage as well as confirm that all system use is metered, such as that by construction water trucks. This Master Plan Update is projecting a conservation goal of 6% to 10% in each of the four-year average demands criteria shown above. With conservation, the following per-capita design criteria are recommended for projecting future demands:

Estacada Water System
Per Capita Design Criteria

Average Annual Demand	230 gpcd
Peak Month Demand	315 gpcd
Peak Day Demand	400 gpcd
Peaking Factor	1.74

A summary of projected demands through the year 2050 is shown in Table 4 below.

Table 4. City of Estacada
Water System Demand Projections

Year	Projected Population	Average Annual Demand (gpd)	Peak Month Demand (gpd)	Peak Day Demand (gpd)
2007	**2,695**	**619,850**	**848,925**	**1,078,000**
2010	2,945	677,350	927,675	1,178,000
2015	3,414	785,220	1,075,410	1,365,600
2020	3,958	910,340	1,246,770	1,583,200
2025	4,580	1,053,400	1,442,700	1,832,000
2027	**4,861**	**1,118,030**	**1,531,215**	**1,944,400**
2030	5,319	1,223,370	1,675,485	2,127,600
2050	9,606	2,209,380	3,025,890	3,842,400

4. Demand Projections with Lumber Mill Offline

Design criteria could also be based on the knowledge that Estacada Lumber may cease operations in the near future. The Mill is fed by three separate meters and uses a substantial amount of the city's total annual water demand. By subtracting the total demand of the Mill from the total demand of the City (both on a monthly and annual basis), an adjusted water demand for the City can be determined. Adjusted water demand is shown in Table 5.

Table 5. City of Estacada
Annual Demand With Lumber Mill Offline

	2003	2004	2005	2006	Average
Annual Demand with Mill (MG)	214.09	226.58	238.75	219.24	224.67
Annual Demand without Mill (MG)	170.78	176.07	154.67	182.69	171.05
Annual Savings (MG)	**43.31**	**50.51**	**84.08**	**36.55**	**53.61**

Annual savings range from 36.55 MG in 2006 to 84.08 MG in 2005, which is compounded by the leak at the mill that was repaired in early 2006 (discussed above). Using the 2006 adjusted annual demands with the Lumber Mill offline, the system design criteria would reduce to the following:

Estacada Water System
Alternative Per Capita Design Criteria
With Lumber Mill Off-Line

Average Annual Demand	200 gpcd
Peak Month Demand	270 gpcd
Peak Day Demand	350 gpcd
Peaking Factor	1.75

Table 6. City of Estacada
Alternative Water System Demand Projections
With the Lumber Mill Off-Line

Year	Projected Population	Average Annual Demand (gpd)	Peak Month Demand (gpd)	Peak Day Demand (gpd)
2007	**2,695**	**539,000**	**727,650**	**943,250**
2010	2,945	589,000	795,150	1,030,750
2015	3,414	682,800	921,780	1,194,900
2020	3,958	791,600	1,068,660	1,385,300
2025	4,580	916,000	1,236,600	1,603,000
2027	**4,861**	**972,200**	**1,312,470**	**1,701,350**
2030	5,319	1,063,800	1,436,130	1,861,650
2050	9,606	1,921,200	2,593,620	3,362,100

With the Mill off-line, the existing water supply system will be capable of supplying approximately 700 more people than was projected with the Mill on-line, or the equivalent of approximately 250 additional single family residential units.

While the Lumber Mill may shut down by the end of the year 2007, for the purposes of projecting demands this document will use per capita design criteria based on the conservation reductions. However, once the Mill operation is terminated the City should expect to see much larger reductions.

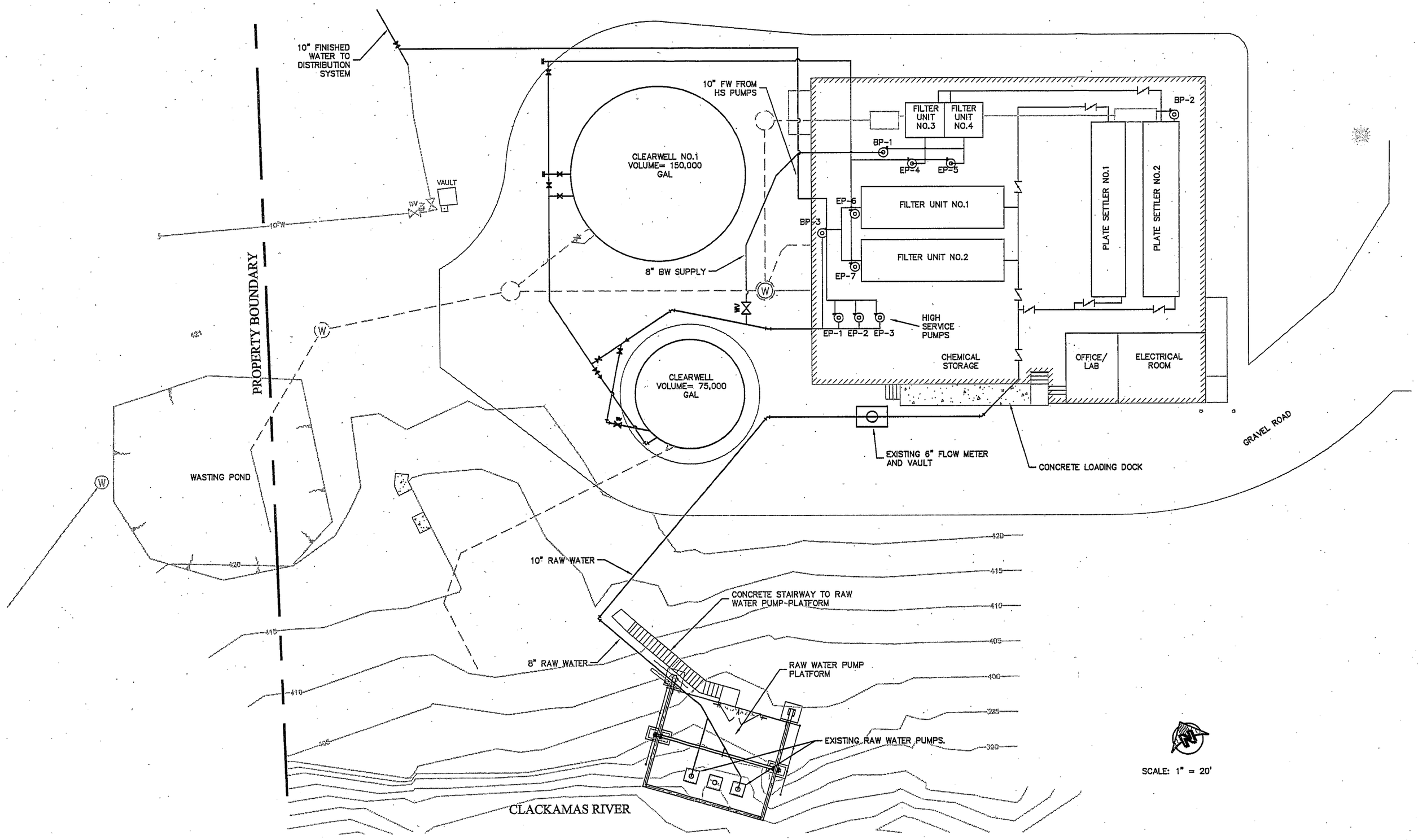

FIGURE 1. WATER TREATMENT PLANT LAYOUT

III. EXISTING WATER SYSTEM OVERVIEW

The original water system is quantified in the 1993 Water System Master Plan document. The City of Estacada's raw water pump station, high service pump station and reservoir Number 1 were constructed and put into service in 1955. The water treatment plant and Reservoir Number 2 were constructed and put into service in 1973.

The water system has undergone numerous upgrades since 1973 as described in the 1993 Water System Master Plan document. In 2001 the system was expanded to a current nominal capacity of 2.0 MGD. Upgrades during that expansion generally included:

- doubling the filtration capacity with associated pumping and control systems,
- the installation of an additional 150,000 gallons of clearwell storage, and
- construction of a new 500,000 gallon high-elevation steel reservoir and transmission main.

Following is a brief summary of the existing water system components.

1. Raw Water Supply

The City possesses two current water rights on the Clackamas River, each for 2 cubic feet per second (cfs), for a total water right of 4 cfs, or 2.58 million gallons per day (MGD). The water rights are dated May 10, 1955 and January 19, 1973.

Raw water is pumped to the adjacent water treatment plant by two vertical turbine pumps located on a metal platform constructed over the Clackamas River in the impounded water of the River Mill Dam. In 2001 the pumps were replaced with new vertical turbine pumps each with a nominal capacity of 1.0 MGD.

2. Water Treatment Facility

The pre-2001 treatment facilities include two 0.5 MGD conventional rapid sand filtration units, including flocculation, tube settlers and sand filters in steel tanks. In 2001 an additional 1.0 MGD of filtration capacity was added with a stand-alone tank for flocculation and plate settlers, followed by a second stand-alone tank that contains two bays of rapid sand filters. The current nominal plant filtration capacity is 2.0 MGD.

The Clackamas River raw water pumps deliver water to the filter units. Filtered water is then pumped by four filter effluent pumps, one for each filter bay, into the on-site clearwells. In 2001 a second clearwell was built, adding a nominal 150,000 gallons of treated water storage capacity to make a total of 225,000 gallons to meet disinfection contact time requirements for the plant.

From the clearwells, finished water is pumped by three High Service pumps into the distribution system. The High Service pumps were replaced in 2001 to provide a nominal capacity of 2.0 MGD with one pump out of service.

The existing water treatment facility layout is shown in Figure 1.

3. Distribution System

Water is efficiently distributed throughout the service area with adequate pressure and volume. The distribution system is comprised of a variety of pipe types and conditions, including steel, ductile iron, asbestos cement and PVC. The distribution system contains three Service Zones.

Figure 2 shows the existing water distribution system layout. The map was prepared based on limited existing records, field inspection and staff knowledge. Records prior to 1972 are sparse, so pipelines older than 1972 cannot be confirmed. However, the map is considered an accurate representation of the current water distribution system for the City.

Since 1993, the City has completed numerous replacements and upgrades to the distribution piping system. Most notably; 1) installing approximately 5,500 feet of new 12-inch PVC main to feed Reservoir No.3; 2) replacing approximately 2,000 feet of 8-inch diameter ductile iron pipe with 12-inch PVC main that feeds Reservoir No.1; 3) installing approximately 6,000 feet of new 12-inch PVC main to feed new development north of Coupland Road; and 4) the installation of several pressure reducing valve stations to create a new intermediate service zone.

The distribution system includes two booster pumping stations. The first is an old station located on Ginseng Drive to serve a small contingency of residences. This station is planned to be abandon once installation of pressure reducing valve stations are installed to provide for an intermediate service zone.

The second booster station was constructed in association with development of the Cazadero Heights subdivision in 1998. This station is located at Reservoir Number 1 and includes two jockey pumps and two reservoir transfer pumps designed to fill the new Reservoir Number 3. The reservoir transfer pumps have a total nominal capacity of 300 gpm with one pump out of service.

In 2001, with the construction of the High Level Reservoir, the City created the high level service zone to serve the new developments above approximate elevation 615. This allowed the jockey pumps at Reservoir Number 1 to be used primarily as on-off fill pumps for the high level reservoir and as a jockey pump backup to the Reservoir Number 3 gravity service. The high service zone currently includes approximately 210 services, with only 40 to 50 currently connected. The remaining are vacant building lots.

Within the past year, an intermediate service zone was established by construction of the first of several pressure reducing valve stations to improve service pressures and allow discontinued operation of the Ginseng Water Booster Station. Although not in service as of the date of this Plan Update, the intermediate zone contains a total of an estimated 170 services, with approximately 50 existing residences. The preliminary settings of each pressure zone are shown in Table 9.

The first Intermediate Zone pressure reducing valve station was installed in 2006 on SE 4th Avenue. Subsequently, a second station was installed on Gardiner Drive, and the third and fourth stations designed for Oak View and Emerald Lane are currently under construction. With completion of these four stations, the intermediate zones will be established and the Ginseng Pumping Station can be abandoned.

CITY OF ESTACADA
CLACKAMAS COUNTY, OREGON

WATER SYSTEM BASE MAP

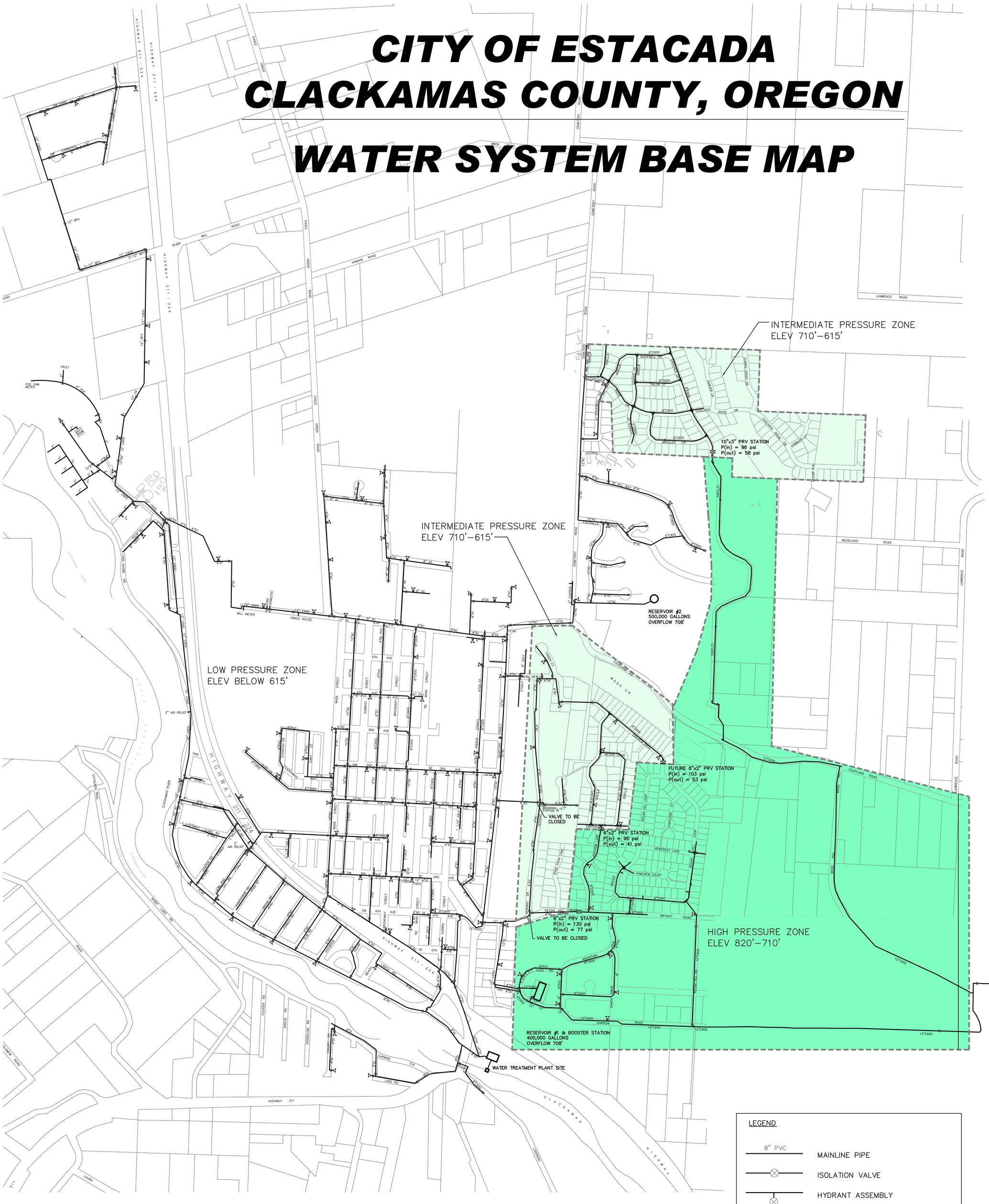

REVISED 03/08

CITY OF ESTACADA
WATER SYSTEM BASE MAP
MARCH 2008

CURRAN–McLEOD, INC.
CONSULTING ENGINEERS

J:\Estacada\Master WA\ESTA-PRO-WA.dwg, 1/25/2010 8:54:32 AM

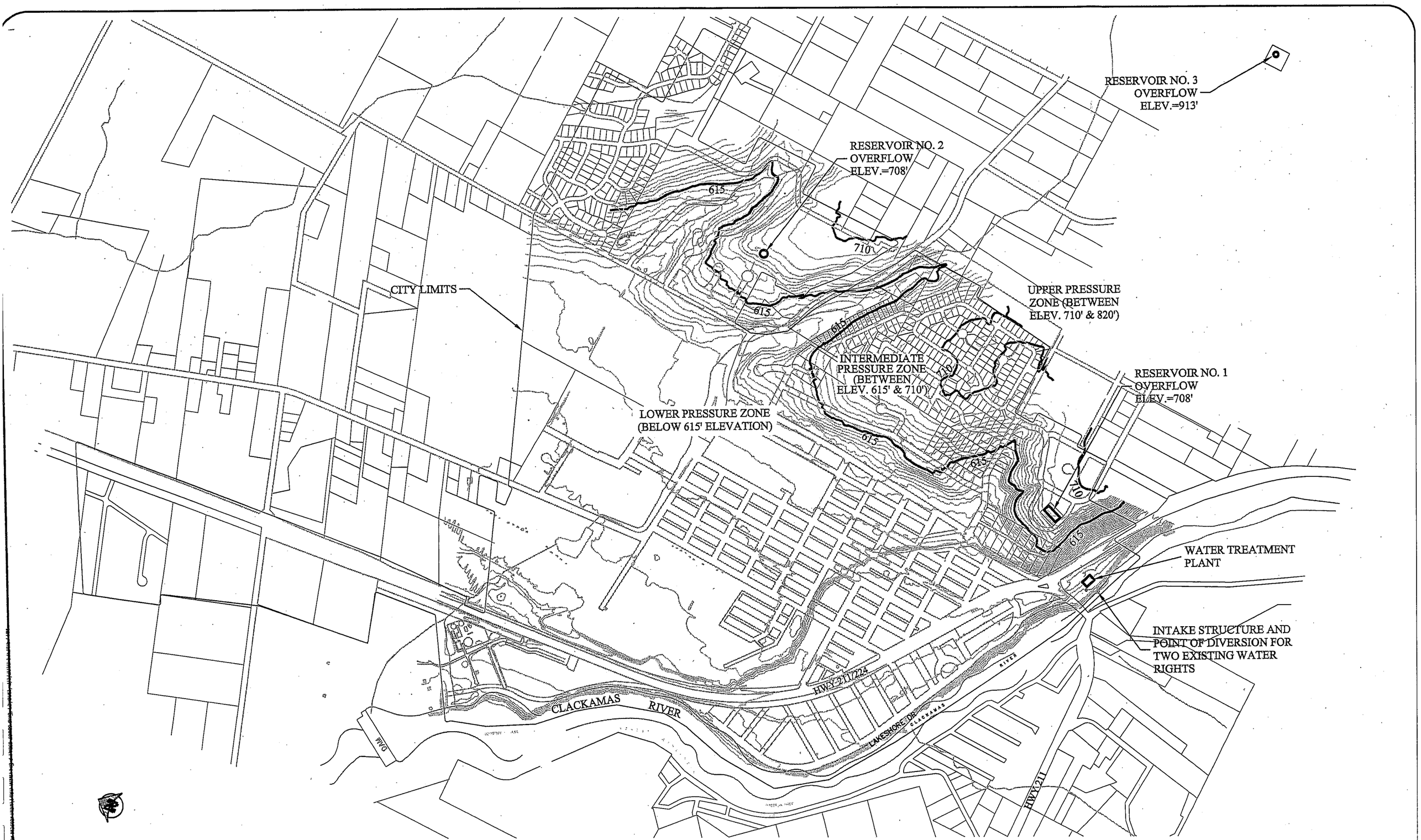

SCALE: 1" = 450'

FIGURE 3. SYSTEM PRESSURE ZONES

Table 9. City of Estacada
Water Distribution Pressure Zones

PRESSURE ZONE	HYDRAULIC GRADE LINE	NOMINAL SERVICE ELEVATIONS	SERVICE PRESSURES
Low Service Zone	708'	Up to 615'	40 - 100 psi
Intermediate Service Zone	800'	615' to710'	40 - 80 psi
High Service Zone	913'	710' to 820'	40 - 90 psi

The Emerald Station is the primary source for the southerly intermediate zone, with stations 2, and 3 providing support. The Gardiner Drive Station is the primary, and currently the only, source feeding the northerly intermediate zone. Table 10 provides the design information for each station. The three pressure service zones are shown on Figure 3.

Table 10. City of Estacada
Pressure Reducing Valve Station Settings

NO.	LOCATION	SIZE	ELEVATION	HYDRAULIC GRADE	PSI - IN	PSI - OUT
1	Emerald Avenue	6" & 2"	704'	798'	90	41
2	SE 4th Avenue	6" & 2"	613'	796'	130	79
3	Oakview Drive	6" & 2"	675'	794'	103	52
4	Gardiner Drive	10" & 3"	688'	822'	98	58

Due to the large elevation changes throughout the water service area, actual water pressures vary substantially. It is not possible to maintain the pressures within the desirable range of 40 psi to 80 psi without the use of individual pressure reducing valves on many services. Anytime the water service pressure exceeds 80 psi, the Uniform Plumbing Code requires the installation of an individual reducing valve on the service.

4. Storage Systems

The City currently has three potable water storage reservoirs that serve the population within the City Limits. Reservoir No.1 is a shallow 400,000 gallon rectangular concrete reservoir that was constructed in 1955 as part of the original water system. This reservoir has subsequently had a liner installed and new metal roof structure. This reservoir is located in the southeast quadrant of the City on Forest Glenn Drive, with an overflow elevation of 708 feet.

Reservoir No.2 is a 500,000 gallon welded steel reservoir constructed in 1973 that is located in the northeast quadrant of the City adjacent to the Foothills subdivision. Reservoir number 2 has a common overflow elevation with Reservoir Number 1 at 708 feet. Reservoirs 1 and 2 are limited to serve the low level distribution system, below approximate elevation 615 feet.

Reservoir No.3 is a 500,000 gallon welded steel reservoir constructed in 2001 above Moss Hill Road at the intersection of Regan Hill Road. Reservoir Number 3 has an overflow elevation of 913 feet and feeds the high and intermediate pressure zones of the water distribution system. The location of the water storage reservoirs are shown on Figure 2 with the water distribution system.

Stored water is distributed into three pressure zones; low, intermediate and high. Reservoirs No.1 and No.2 are dedicated to service the low pressure zone below approximate elevation 615 feet. Reservoir No.3 has sufficient elevation to provide gravity service to the high level zone, up to approximate elevation 820', as well as provide the primary source of water to the intermediate zone, elevations 615' to 710', and redundant supply to the low level zone through pressure reducing stations. Pressure reducing valves dictate the transition between the intermediate/high pressure zones and low pressure zone served by Reservoir No.3.

IV. FACILITIES EVALUATION

1. Water Source

The City of Estacada withdraws drinking water from the Clackamas River pursuant to two permits issued by the Oregon Water Resources Department. Water is pumped from a single platform located along the bank of the Clackamas River at the Treatment Plant site.

Table 11. City of Estacada
Water Rights Permits

Source	Permit No.	Date	Capacity
Clackamas River	23610	May 10, 1955	2.0 cfs (1.29 mgd)
Clackamas River	37375	January 19, 1973	2.0 cfs (1.29 mgd)
Total Permitted Source Capacity			4.0 cfs (2.58 mgd)

Although the existing source capacity will easily provide for the 20 year planning window, projection of water demands to a 40 year planning window forecasts a peak day at more than 3.6 MGD, creating a potential deficiency of 1.0 MGD (1.55 cfs). This deficiency must be satisfied by acquiring rights to additional water over the next several decades.

Oregon Water Resources Department has classified most of the Clackamas River Sub-basin for limited use and has withdrawn most tributary streams from further appropriation. The river segment from the North Fork Dam at river mile 30 to the mouth is classified for domestic, livestock, municipal, irrigation, industrial, agricultural, commercial, power, fish life, wildlife, recreation, pollution abatement, wetland enhancement, and public in-stream uses from November 1 through June 30, and only for domestic, commercial use for customarily domestic purposes not to exceed 0.01cfs, municipal, livestock, and public in-stream uses from July 1 through October 30.

Peak day water demand is projected to exceed the City's existing rights when population exceeds 6,400. This could occur late in the 2030s. Although this is beyond the 20 year planning horizon relative to treatment, distribution and storage, the need to aggressively conserve water and acquire additional source is critical to satisfy long term demands.

Additional sources may include:

- Acquisition of existing water rights on the Clackamas or its tributaries;
- Negotiating with PGE and OWRD for stored water from Timothy Lake;
- Exploring groundwater resources (wells);
- Consideration of acquiring non-conservative hydropower rights from PGE; and
- Exchange of Reclaimed Water under ORS 537.131 and 537.533.

Each option is discussed below.

1. Existing Water Rights

The existing water right certificates and permits acquired by private interests on the main stem Clackamas and tributaries nearby are shown in Table 12 below.

Table 12. Nearby Water Rights

Owner	Source	Certificate	Permit	Date	Quantity	Use
Park Lumber Co., Inc.	Clackamas	29325	25309	1/31/58	0.2 cfs	Mill Pond
Milwaukie Plywood Corp.	Eagle Creek	41480	R-4673	9/15/65	0.15 cfs	Log Pond
J. Graham Killam	Eagle Creek	–	34875	8/11/70	0.85 cfs	Irrigation
Harvey Barnard	Eagle Creek	30909	24875	5/24/57	1.31 cfs	Irrigation

The recorded owners of these rights are likely outdated and the rights may have proceeded in estates, or new ownership in the case of the lumber operations. The water rights remain with the properties depending on their disposition. Water rights are not always transferred, which affects the reliability of state records.

The latter two private water rights may be worth inquiry since the permitted quantities are very beneficial when added to the City's existing rights. If these rights can be acquired, the Point of Diversion, Place of Use, Ownership, and Water Use would need to work into the Water Right Transfer process.

2. Timothy Lake Stored Water

Clackamas River water users have successfully negotiated with Portland General Electric and OWRD for acquisition of water stored in Timothy Lake. The details of the agreements are not available at this writing; however, the summary is that PGE has agreed to release waters of Timothy Lake during low water periods to:

- assure the in stream water rights are maintained in support of fisheries habitat; and,
- provide sufficient additional water quantities to satisfy a portion of drinking water demands in specific downstream water systems.

It may be surmised that water purveyors such as Sunrise Water Authority, North Clackamas County Water Commission, and Clackamas River Water are fulfilling a water source shortfall involving more than 10.0 MGD.

The City of Estacada may need to add 1.0 MGD to 1.5 MGD in the foreseeable future. This may be considered minor by comparison and promises to be a top possibility for future water supplies.

Since these negotiated arrangements are in place, and since the City's water needs are not large, and since there are few water supply options realistically available for Estacada, an agreement with PGE may be a realistic resolution and discussions should be initiated to pursue this option.

3. Groundwater Resources

Well records show at least six wells east and north of Estacada with yields exceeding 100 gpm (0.22 cfs); one tested at 180 gpm (0.4 cfs). Once the surficial clay layers are penetrated, the underlying Sardine Formation basalts provide substantial water flows.

Unfortunately, water chemistry is not revealed on the OWRD well logs, only temperature and subjective opinion by the well driller of palatability.

There is some doubt that wells sized and constructed for high output will produce yields consistently exceeding 100 gpm. And, the risk of long term reliance on a well field of more than five municipal wells is not practicable.

The underlying geology of the Estacada / Clackamas Valley is summarized in a US Geological Survey paper entitled, "Ground Water in the Northern Part of Clackamas County, Oregon", Open-File Report 80-1049. The City of Estacada is underlain by the "Sardine Formation".

> *"the depth to water and depth and yield of wells vary greatly over the area as a result of diversities in topography and in the character of the Sardine Rocks."*

Well yields are described as ranging from 4 to 65 gpm; fewer than half the wells produce as much as 10 gpm. This may be explained as much by the residential need and well construction as the actual water availability.

Wells in a 10 square mile area east of Estacada are in sands and gravels of the Springwater Formation overlying the Sardine Formation. Wells typically yield more than 10 gpm in this area, and as much as 100 gpm.

Again, the reliability of municipal wells is not high and does not merit a high priority for the City's future water supplies.

4. Hydropower Water Rights

Portland General Electric enjoys pre-1909 inchoate water rights embedded in the licenses for the operating hydropower facilities; River Mill Dam, Faraday Dam, and North Fork facilities, among others. The water rights await the adjudication process proceeding at a phlegmatic pace within OWRD. The likelihood of the Clackamas River rights being adjudicated anytime soon is remote.

The result for the City of Estacada is that the existing rights for hydropower are inaccessible in any practicable manner. They are also non-consumptive rights making them doubly problematic when viewed from the standpoint of water conservation and preservation of river flows.

Given that Estacada returns an average of 40% of water withdrawn within its permits, the 60% consumed is not likely to be committed from a non-consumptive source. Appropriations of water from the Clackamas River are limited between July and October 30.

5. Reclaimed Water / Exchange of Water

Statutes establish the regulatory controls for the use of water from one source in exchange for supplying replacement water in an amount to satisfy prior appropriations from the other source. Such an exchange must satisfy certain conditions among which is the "better conservation and use of the waters of the state".

A case could be made for the City of Estacada supplying reclaimed wastewater seasonally for nearby irrigation water users in exchange for an equal amount increase in the seasonal water withdrawal from the Clackamas River during peak municipal demand periods (June through October). Such an exchange could result in an increase in source capability to meet the projected deficit, although, that is an aggressive target.

While this logic may hold promise, OWRD records show only two surface water right holders near the City of Estacada wastewater treatment plant capable of sustaining such an exchange of volume, and one is Oregon Department of Transportation with irrigation rights to 0.9 cfs for Milo McIver State Park (unlikely to exchange rights). The other recorded right is for 0.05 cfs and is of no significance in the acquisition of future municipal water supplies.

A more promising approach is to explore reclaimed water use. ORS 537.132, et seq. exempts the application of water rights rules for reclaimed waters of municipal treatment facilities as defined in ORS 454, and defines the approval process required for OWRD acknowledgment. Although not specifically stated, this appears to assume the reclaimed water is provided directly from the point of discharge.

This exemption requires that (a) the reclaimed waters be authorized under the NPDES permit, (b) DEQ consults with the State Department of Fish & Wildlife to assure there is no significant impact to fish &and wildlife, and (c) the DEQ determines that the use of reclaimed waters will improve the water quality of the receiving stream.

The City of Estacada operates a municipal treatment facility that treats wastewater to meet the Clackamas River basin standards and discharges to the Clackamas River. The pooled river water above the River Mill Dam is the point of discharge for the wastewater treatment plant, and the domestic water intake is approximately a mile upstream in the same pooled water. Although not directly connected, the plant effluent meets the definition of reclaimed waters and is a viable, unappropriated quantity of water that could be available to offset an increased appropriation from the backwater of the River Mill Dam.

An analysis of consumptive use quantifies the additional capacity available from the City's existing Clackamas River source. A review of historical records indicates the City of Estacada has a consumptive water use of only 60% of the volume extracted from the Clackamas River. A conservative average indicates 40% of all raw water removed from the river is returned as treated effluent from the wastewater treatment system. Documentation of this pattern could provide the needed increase in source capacity to meet the 2050 planning window.

Table 13. Projected Raw Water Source Requirements with 40% Reclaimed Water

Year	Projected Population	Peak Day Demand (MGD)	Reclaimed Water (MGD)	Current Rights (MGD)	Source Surplus (MGD)
2007	**2,695**	**1.078**	**0.431**	**2.58**	**1.93**
2010	2,945	1.178	0.47	2.58	1.87
2015	3,414	1.366	0.55	2.58	1.76
2020	3,958	1.583	0.63	2.58	1.63
2025	4,580	1.832	0.73	2.58	1.48
2027	**4,861**	**1.944**	**0.78**	**2.58**	**1.41**
2030	5,319	2.128	0.85	2.58	1.30
2050	9,606	3.842	1.54	2.58	0.27

Each source option should be explored fully before being discounted. The most feasible mechanisms for acquisition of additional water to serve the future needs of the City of Estacada appear to be in conservation and reclamation.

2. Source Pumping Systems

Two new raw water pumps were installed in 2001 to replace the existing, rated at 1 MGD each at a total head of 62 feet. Actual pump output, however, becomes the limiting factor due to the higher than anticipated system head. With one pump in service, the plant can treat slightly over 1 MGD. With both pumps in service the head limits pump output to a total of 1.5 MGD. As a result, the pumps are not capable of providing sufficient water to match the treatment capacity of 2.0 MGD. The current reliable source capacity, i.e., with one pump out of service, is only 1.0 MGD.

3. Water Treatment

The treatment plant has a nominal capacity of 2.0 MGD with all four filter units on-line. Actual capacity is less due to several factors, including the raw water and high service pump capacities, and the limitations on unit processes within the treatment units. A maximum reliable capacity is likely closer to 1.0 MGD.

The most current Comprehensive Performance Evaluation completed by the Oregon Department of Human Resources indicates the sedimentation process on treatment units 1 and 2 are rated for a maximum flow of only 231 gpm as opposed to their nominal capacity of 350 gpm. As a result, the pre-existing treatment units are categorized as a direct filtration process with only a 2 log reduction credit. Subsequently, the disinfection system is then deficient in providing the additional 1 log reduction required for surface water treatment.

The City has indicated that the plate settling units that were installed in 2001 are not operating reliably, especially when the raw water turbidity is high. Modifications to the facility are required in order to operate the plate settlers to full capacity.

The City utilizes three high service pumps to deliver water to the distribution system. With all three pumps operating, the plant can deliver 1.7 MGD to the distribution system. If any one pump were to fail the remaining two pumps have the capacity to deliver 1.4 MGD. In an overview, the existing treatment facilities are then limited to a reliable capacity of approximately 1.4 MGD. At a 3% projected growth rate, peak day demands of the water system will exceed the reliable capacity of the plant in approximately 10 years.

The overall goal of the treatment facility is to reliably deliver the City's full water rights of 2.58 MGD while maintaining redundancy with the pumps. While the current high service pump configuration meets the reliability and redundancy criteria for design flow of 1.4 MGD with full redundancy, pump upgrades will be required in the next decade.

Backwashing of the system uses treated water from the clearwells. Configuration of the backwash system piping is such that when a backwash occurs, head losses increase for the high service pumping system, and delivery of finished water to the system is further compromised. Modifications to the system piping, specifically replacing approximately 56 feet of 8" feed pipe with 12" pipe at Clearwell No. 1 will add capacity.

All functions of the treatment process, including chemical handling and feeding, settling, filtering, backwashing and delivery, are accomplished in one limited, enclosed space. The office/laboratory and electrical rooms are part of the same building. While the space is functional for the current configuration, any future modifications will push the building beyond reasonable working conditions. Additionally, the office/laboratory room is currently too small to adequately function as both an office and laboratory. A new building would allow expansion of the office and laboratory into separate rooms.

Disinfection of treated water is accomplished through the use of liquid sodium hypochlorite. Flow from all four filters is disinfected and discharged into the 75,000 and 150,000 gallon clearwells on-site. The capacity of the disinfection system is another limiting process of the treatment facility.

In May of 2002 a tracer study was completed to determine the flow characteristics of the two clearwells in series. The conclusion was that 48,000 gallons was the total effective volume of both clearwells as related to the effects of disinfection.

The following table shows the maximum allowable flow that can be effectively disinfected to meet the water quality requirements in accordance with the Surface Water Treatment Rule based on an assumed worst case temperature of 5 degrees C:

Maximum Allowed Flow Rates to Achieve
1.0 Log Reduction with Disinfection

Clearwells On-line	Useable Volume	Chlorine Residual	Water Temp	Required CT	**Maximum Flow Rate**
1 and 2	48,000 g	1.00 mg/l	5° C	50	**960 gpm**
1 and 2	48,000 g	1.20 mg/l	5° C	51	**1,130 gpm**
1 and 2	48,000 g	1.40 mg/l	5° C	52	**1,290 gpm**
1 only	20,000 g	1.00 mg/l	5° C	50	**400 gpm**
1 only	20,000 g	1.20 mg/l	5° C	51	**470 gpm**
1 only	20,000 g	1.40 mg/l	5° C	52	**540 gpm**

The tracer study indicates the chlorine residual would need to be approximately 1.5 mg/l to provide the required CT at the full plant capacity of 1,400 gpm.

The ability of the existing clearwells to meet the CT requirements will mandate that piping or baffling modifications be completed, additional storage be provided or alternative disinfection process incorporated into the plant.

To be proactive in protecting water quality, the Capital Improvement Plan includes the installation of an ultraviolet irradiation (UV) system for disinfection. UV disinfection does not require any contact volume, however, a disinfectant such as the continued use of chlorine, will be required to maintain the residual throughout the distribution system. This will result in discontinuing the use of the clearwells as a CT detention structure and be used only as the wet well for the high service pumping operation.

The treatment plant has a variety of process issues that should be refined with any plant upgrade. The turbidity is difficult to control with the existing automated instrumentation. Hydraulics through the plate settlers and to the treatment units results in higher than required velocities and impacts turbidity. There is a variety of pneumatic and electric solenoid valves that should be standardized. Process sequencing currently allows one unit to surge when the second unit initiates a backwash. Physical access corridors and stairways are difficult and need to be better exposed for ease of operator access and for equipment maintenance.

Most recently, an added emphasis has been placed on site security. Excepting the access road, the Water Treatment Plant site currently is not fenced to limit access. Additional fencing should be installed to secure the entire perimeter.

4. Finished Water Storage

Finished water storage volume is conservatively equated to one peak day demand plus fire flow. Due to the flashy water extracted from the Clackamas River, it would be beneficial for the City to conservatively size any storage systems. In the event of high turbidity spikes in the raw water supply, the larger storage volume will allow suspending the production of water for a longer period.

Storage is not dependent upon the availability of raw water sources but rather only space and financial constraints. As a result, storage requirements are projected for a 20-year planning period only and can be expanded at any time.

The 1993 Water System Master Plan indicated that a third storage reservoir should be built to meet the system demands at higher elevations. Based on those recommendations, Reservoir No. 3 was constructed in 2001 with a nominal capacity of 500,000 gallons and overflow water elevation of 913 feet. This reservoir supplies water to customers in the high service level and the intermediate service level through several pressure reducing valve stations. Reservoir Number 3 serves all services above approximate elevation 615 feet.

Reservoirs No.1 and No.2 (400,000 and 500,000 gallon capacity respectively) effectively service all remaining customers of the City below elevation 615 feet. Reservoir No.3 provides redundancy to the low level service zone through several pressure reducing valve stations. The total capacity of all water storage is currently 1,400,000 gallons with 900,000 gallons of low level and 500,000 gallons of high/intermediate storage.

The two existing clearwells located at the treatment facility are 75,000 and 150,000 gallons respectively. However, they are not included in the storage capacity of the system because they are used to satisfy the disinfection detention requirement at the Water Treatment Plant and are not available for gravity flow into the distribution system.

Fire flow requirements were outlined in the 1993 Water System Master Plan as requiring 3,500 gpm for 3 hours. While the fire code has been updated since then, this flow and duration are conservative and will be used in this analysis to maintain consistency. Using a fire flow of 3,500 gpm for a period of 3 hours, the required storage is 630,000 gallons. As with the previous document, this volume will estimate storage needs based on the peak day demand plus fire flow requirements.

Table 14. Water Storage Requirements

Year	Projected Population	Required Storage (gal)			Available Storage (gal)	Storage Deficiency (gal)
		Peak Flow	Fire Flow	Total		
2007	**2,695**	**1,078,000**	**630,000**	**1,708,000**	**1,400,000**	**(308,000)**
2012	3124	1,249,600	630,000	1,879,600	1,400,000	(479,600)
2017	3,622	1,448,800	630,000	2,078,800	1,400,000	(678,800)
2022	4,198	1,679,200	630,000	2,309,200	1,400,000	(909,200)
2027	**4,861**	**1,944,400**	**630,000**	**2,574,400**	**1,400,000**	**(1,174,400)**

Based on the table above, existing storage facilities are undersized by approximately 300,000 gallons. Under the projected growth rate of 3%, the existing facilities are projected to be deficient by approximately 1,200,000 gallons by the end of the 20-year planning period.

The distribution of customers currently includes approximately 800 services in the low level service area and 50 in each of the intermediate and high systems. Based on this ratio of approximately 8:1, the existing storage requirements would ideally have 1,240,000 in the low level service area and 160,000 gallons in the high/intermediate level system.

Current development projects on the planning horizon include a substantial number of potential lots in each of the three service zones. The high/intermediate service zones have approximately 400 potential unimproved lots with an equal number of potential lots in the low level zone. This would re-proportion the storage needs to a ratio of approximately 2.5:1. The current storage ration is 1.8:1 of low level storage to high level storage.

To resolve the storage deficiency projected for the planning horizon, an additional 1 MG of storage should be constructed. To balance the service zone needs, the first phase of storage construction should be 500,000 gallons in the low level system at the existing Reservoir Number 2 site. The second phase of storage construction should be an additional 500,000 gallons in the high level system as additional high/intermediate growth occurs north east of the City. The second high level reservoir should be located north of Wade Creek to provide service that is located near the largest growth potential. High level storage will also provide redundancy to the low level service zone.

In summary, two additional 500,000 gallon reservoirs are recommended to provide a total of 2.4 million gallons of storage by the end of the 20-year planning horizon.

5. Distribution System

Distribution demands are dictated by the need to distribute fire flows to both residential and industrial customers. State Fire Code requires a minimum flow of 1,000 gallons per minute for 2 hours for one- and two-family dwellings, and varying flows for commercial/industrial areas and schools based on square footage and type of buildings. This plan update will follow the fire flow recommendations calculated for the commercial/industrial buildings in the 1993 Water Master Plan of 3,500 gallons per minute for 3 hours.

The Distribution system was modeled as part of the 1993 Water System Master Plan and was determined to be adequate to carry the peak day demands of the system for the majority of the water services. Exceptions were services at elevations greater than 600 feet, which would see service pressures drop below 45 pounds per square inch (psi).

Based on recommendations of the 1993 Water Service Master Plan, many improvements have been made to the distribution system. Most notably was replacement of approximately 2,000 feet of 8" ductile iron pipe with 12" PVC pipe that feeds Reservoir No.2. Other piping modifications have included up-sizing various runs throughout the system, as well as installing Reservoir No.3 with associated feed pipe and multiple PRV stations to connect into the existing system.

A new 12" main line was also installed with the Cascadia Ridge development that extends the high level service to the area north of Wade Creek. This will provide adequate capacity to serve the large number of developments along Cemetery Road.

Upgrades to older and smaller, less efficient mains throughout the system should be done on an ongoing basis during the 20-year planning horizon. Much of the system piping is approaching or is beyond the expected service life, especially the steel pipe. The average age and length of various pipe within the system are shown in Table 15.

Table 15. Existing Distribution System Summary of Major Water Mains

Pipe Material	Pipe Diameter (in)	Approx. Length (ft)	Approx. Age (years)	Expected Service Life (years)	Service Life Remaining (years)
Steel	2, 4	1,700	52	40	(12)
	5, 6	11,700	54	40	(14)
	8	1,560	54	40	(14)
AC	4	2,050	38	50	12
	6	14,620	34	50	16
	8	13,995	30	50	20
	10	9,580	33	50	17
	12	4,030	32	50	18
DI	4	575	23	50	27
	6	615	34	50	16
	8	1,365	25	50	25
PVC	4	475	23	50	27
	6	3,580	23	50	27
	8	990	18	50	32
	12	13,475	5	50	45

All of the steel pipe is undersized and beyond the design service life. A plan to up-size and replace all steel pipe should be included in the Capital Improvement Plan as funding allows, to be proactive and minimize repair costs and emergency outage situations due to pipeline failures.

V. CAPITOL IMPROVEMENT PLANNING

All estimated costs are in 2008 dollars and based on the current Engineering News Record Construction Cost Index for a 20 city average of 8,090 for January 2008.

1. Source Improvements

Existing source capacity of 2.58 MGD is adequate for the 20 year planning period. However, as stated earlier, at the projected growth rate of 3% the existing source capacity will be exceeded in approximately 30 years. Additional consumptive water rights for the Clackamas River are limited, so alternative sources must be explored. A promising approach is to apply for exchange of water rights or pursue non-consumptive acknowledgment from OWRD that would allow the City to extract an additional 1.0 MGD or more and serve the City through year 2050.

The existing source pump station was upgraded in 2001; however the two existing vertical turbine pumps are undersized. At given hydraulic conditions the pumps are capable of a combined output of 1,050 gpm (1.51 MGD). No redundancy is built into the raw water pump station; if one pump fails the remaining pump has an approximate output of 750 gpm (1.08 MGD). Under current peak flow conditions the limited reservoir storage would begin to deplete under these conditions.

Upgrades to the raw water pumps should be made in stages. Stage 1 upgrades should be completed immediately and replace both existing 15 Hp motors with 20 Hp motors to match the existing switchgear and MCC capacity. The work should include installing new impellers to produce a reliable 900 to 950 gpm per pump, or a reliable capacity of 1.3 to 1.40 MGD with one pump out of service. The goal would be to provide as much output as possible to maximize the existing 20 horsepower motor controls.

Stage 2 upgrades should be completed as peak day demands approach the reliable capacity, which for 1.4 MGD is at approximately 3,500 population. Stage 2 includes installing a third 20 Hp pump for a reliable 2.0 MGD total capacity with one pump out of service. Stage 2 improvements will be sufficient to serve a total population of 5,000 people.

Pumping upgrades are estimated to cost $25,000 for Stage 1 improvements and $35,000 for Stage 2 improvements.

Additionally, the access to the intake platform in the Clackamas River is in poor condition and lacks adequate stairways and handrails. Safety and security improvements are needed to minimize the City's liability for workplace safety. Access improvements are estimated to cost $15,000 - $20,000.

2. Treatment Plant Improvements

There are numerous improvements needed at the Water Treatment Plant over the planning window to improve operations, treated water quality, and reliability of the system:

1. Clearwell Pipe Replacement. Headloss in the existing 8" pipe and fittings that connect the clearwells creates significant differences in water surface elevations between the tanks. The 8" pipe and fittings should be replaced with 12" pipe and fittings to reduce the high service pump heads and to recover as much clearwell detention capacity as possible. Baffling may also be considered as an interim solution to provide additional effective volume. Total costs are estimated at $25,000.

2. Piping modifications to Plate Settlers. The 14" discharge pipe should be inner-connected and valved to provide better control of the process trains. The overflow pipe elevation should be lowered to minimize flooding the tanks. Total costs are estimated at $15,000.

3. Access to Treatment Units. Replacing the existing ships ladders with stairs or adding additional access will reduce worker safety hazards and improve access to the top of the treatment units and plate settlers. Total costs are estimated at $10,000.

4. Re-coat Pipe and Equipment & New Filter Media. Much of the piping, as well as the older treatment units, are showing extreme signs of wear. All piping and equipment should be repainted within the planning horizon of this Master Plan Update. Recoating the old treatment units should be given high priority due to their condition. Recoating these units will require removal and replacement of all media, support gravels and possibly under drains. Filter media will be replaced at this time as well. Total costs are estimated to be $140,000.

5. Treatment Unit 1 & 2 Filter Effluent Pumps and Backwash Pump. These three pumps have exceeded their service life and exhibit extensive corrosion. These pumps should be replaced as early as funding allows, coincident with recoating efforts of the treatment unit, if not earlier. Total cost of pump replacement is estimated at $40,000.

6. Security fencing is a high priority item that should be undertaken in the first priority period. An estimated 2,000 feet of six-foot chain link fencing with barbed wire should be installed. Estimated cost is $60,000.

7. New Office & Lab Space. The existing office and lab room is only marginally adequate for either function. Additionally, the chemical feed system and piping within the plant is congested and has very limited access. As demands increase, additional lab and office space should be developed and work spaces expanded. This should be completed as early as funding allows, but at least incorporated into the improvements proposed with stage 2, i.e., expansion of the reliable capacity from 1.4 MGD to 2.0 MGD. Tentatively, a separate metal building is anticipated, located west of the existing filter building, and will house the high service pumps, UV disinfection system, all chemical feed systems, lab/office space and bathroom facilities. This will provide much better space allocation in the existing filter building and will eliminate many of the safety and crowding issues. Cost of this facility is estimated at $180,000 not including the cost of the chemical feed systems or proposed UV system.

8. High Service Pump Upgrades. As stated earlier, the three existing high service pumps are capable of a combined flow of 1.7 MGD, and a reliable flow of 1.4 MGD with one pump

out of service. The current reliable capacity is sufficient to support a population of approximately 3,500. Upgrades should be done in stages as demands dictate.

a. Stage 1 improvements would be mandated as population approaches 3,500 and would include replacing the impellers (and bearings & seals) of the high service pumps to improve output of each pump to the maximum of the horsepower rating. This should achieve a reliable capacity of 1.6 MGD with two pumps operational. Alternatively, it may be as cost effective to simply replace the existing pumps. Efficiency improvements can be achieved by replacing the existing 4" flow control valves with 8" silent check valves, and replacing the existing 6"discharge pipes with 8" pipe. Doing so will reduce overall head losses in the system and reduce power demands by approximately 1 horsepower per pump. Total costs for Stage 1 improvements are estimated at $35,000.

b. Stage 2 improvements include installing a fourth high service pump and reconfiguring the existing pumps and piping. The system would then have the necessary reliable capacity and redundancy to meet peak demands of 2.0 MGD. Total costs for Stage 3 improvements are estimated at $30,000.

9. As demands increase, the disinfection system will be unable to meet the required CT levels. Conversion of the plant to UV disinfection would upgrade the technology and eliminate the need to construct additional clearwell volume. UV disinfection is estimated to cost $150,000 and should be implemented when the existing clearwells can no longer meet the CT requirements or with the expanded operations building project.

Installation of an engine generator was explored, however the recommendation of this update is to provide sufficient water storage to satisfy the demand during periods of power outage. Adequate storage facilities will provide a minimum of three days of average daily demands which should be sufficient to eliminate the need to operate the plant during period of outage.

3. Storage Improvements

Construction of a new storage reservoir to service the high elevation zone, as well as the intermediate and lower zones will be necessary to satisfy projected growth rates and peak demands. Currently the storage system is deficient by approximately 300,000 gallons. At projected growth rates the existing storage system will be deficient by over 1,000,000 gallons at the end of the planning period in 2027.

General security, telemetry and maintenance of the 3 existing reservoirs will need to be addressed within the 20-year planning window. At a minimum security upgrades to all 3 reservoirs should include assuring fencing is secure and complete. Telemetry upgrades would include installing alarms and monitoring equipment. Total costs for security and telemetry upgrades are estimated at $25,000.

The first stage of reservoir improvements should be a 500,000 gallon low level reservoir similar to the existing Reservoir Number 2 and located at the Reservoir Number 2 site. This reservoir should be developed with a pump station to deliver water to the High Level system to provide

source redundancy. Anticipated costs to construct a new 500,000 steel storage reservoir, including site preparation, piping, and controls is anticipated to be $450,000. This stage should be implemented as funding allows, in the next 6 to 10 years.

The second stage of storage improvements includes an additional 500,000 gallon high level reservoir located east of Cascadia Ridge development. This reservoir should include a pressure reducing valve station interconnection to the intermediate or low level system and booster pumping station to fill the new reservoir independent of the existing high level reservoir. This reservoir project is estimated to cost $700,000 with interconnected piping and should be constructed as substantial growth occurs in the northeast section of the City bringing a high level pipeline to the vicinity of the proposed reservoir. It is anticipated this reservoir will be required in 16 to 20 years.

Improvements to the existing low level reservoir Number 1 roofing and coating system will be required to extend the life of this reservoir. A new roof system will provide security and protect water quality. This is a low priority and is estimated to cost $60,000.

4. Distribution System Improvements

Distribution system improvements were identified in the 1993 Water System Master Plan and included a number of pipelines to compete loops and improve fire flows. Much of the piping improvements identified have been completed, or will be completed with private development.

Efforts have been made to create the intermediate pressure zone, thus eliminating the Ginseng Pump Station, that have included installing PRV stations and isolation valves. Doing so has increased water pressure to customers in the Regan Hill Development and along Ginseng, Westview, and the upper reach of Carol Street and Oakview Drive.

The cost of replacing and upsizing all remaining steel and galvanized pipe throughout the system as recommended in the 1993 Water System Master Plan was identified as $295,000. Using the current construction cost estimates, this work is estimated at approximately $1,000,000.

In addition to the improvements listed in the 1993 Water Master Plan, the City staff has identified several projects that would improve the distribution system operations:

1. Continue to update existing system mapping so that up-to-date water system maps are available. This includes identifying all new construction piping on the master mapping system as they are built.

2. Provide secure fire hydrant locks (as approved by the fire marshal) to as many as 20 hydrants that have been identified as high-risk for illegal tapping. This will help to reduce the volume of unmetered water losses to the system.

Capital Improvement Plan Summary

The following table summarizes all Capitol Improvements identified as a component of this planning update.

Table 16. City of Estacada
Water System Capitol Improvements Plan Summary

PROJECT	COST (2008)	PRIORITY (YEARS)
Source Improvements		
Stage 1 Raw Water Pumps Upgrades	$25,000	1-5
Safety & Security Improvements	$20,000	1-5
Acquisition of Water Rights	$10,000	6-10
Stage 2 Raw Water Pump Improvement	$35,000	6-10
Total Source Costs	**$90,000**	
Treatment Improvements		
1. Replace Piping Between Clearwells	$25,000	1-5
2. Plate Settler Piping Modif	$15,000	1-5
3. Replace Filter Access Ladders	$10,000	1-5
4. Replace Filter Media and Repaint Equipment & Piping	$140,000	1-5
5. FE & BW Pump for Units 1&2	$40,000	1-5
6. Security Fencing	$60,000	1-5
7. Office & Lab Building	$180,000	6-10
8a. High Service Pumps Upgrades & Pipe Modifications	$35,000	6-10
8b. New High Service Pump	$30,000	11-15
9. UV Disinfection	$150,000	11-15
Total Treatment Costs	**$685,000**	
Storage Improvements		
1. Existing Reservoir Security	$15,000	1-5
2. Low Level 500,000 gallon Storage	$450,000	6-10
3. Recoat Existing Reservoir No.2	$80,000	6-10
4. New High Level 500,000g Storage	$700,000	16-20
5. New coating & Roofing Res No. 1	$60,000	16-20
6. Recoat Existing Reservoir No.3	$80,000	16-20
Total Storage Costs	**$1,385,000**	
Distribution Improvements		
Miscellaneous Piping & Oversizing	$1,000,000	1-20
Total Distribution Costs	**$1,000,000**	
TOTAL PROJECT COSTS	***$3,160,000***	
Engineering, Legal & Admin (20%)	*$620,000*	
Project Contingencies (20%)	*$620,000*	
TOTAL CIP ESTIMATED COST	***$4,400,000***	

1. PROJECT FUNDING

A discussion of all revenue sources is given below:

1. Monthly Rates

The City currently derives operating revenues from monthly rates paid by users. The rates were last updated in February 2008 as follows:

Table 17. City of Estacada
2008 Monthly Water Rates

Meter Size	Water Rate (per month/unit)
5/8" to 3/4"	$16.00
1"	$23.00
1 ½"	$51.90
2"	$78.65
3"	$112.60
4"	$143.40
6"	$214.55

Additionally, the City collects a standard monthly commodity charge of $3.00 per 1,000 gallons for all users. The rate schedule is considered a single-tier plan, with all metered water usage charged. The base rate assures a steady revenue inflow, while the commodity rate pays for variable costs of power, chemicals, and usable goods of the utility.

2. System Development Charges

The City has implemented a method for assessing a System Development Charge (SDCs) to recover capacity investments and fund needed system improvements to meet future needs. The methodology is based on allocating the value of existing surplus capacity and the estimated cost of the Capitol Improvement Plan to the number of future benefitted users.

Several variables contribute to the methodology of cost allocation, including the Average Maximum Daily Consumption per equivalent 3/4" meter connection. The four-year average of maximum day demand equates to approximately 430 gallons per capita per day. The previous and proposed SDC methodology use a maximum day demand based on 430 gallons per capita.

Funds that are collected from SDCs should be retained in a separate account and made available for projects that upgrade the existing system (reimbursement fees) or add needed capacity to the water system (Improvement Fees).

The updated SDC methodology and Capital Improvement Plans is attached in this planning document. A summary of the rates required to allocate an equitable proportion of costs to future connections are as shown below:

CITY OF ESTACADA
WATER SYSTEM SDC FEE SCHEDULE
January 2008

METER SIZE	EDU	IMPROVEMENT FEE	REIMBURSEMENT FEE	TOTAL SDC
3/4"	1.00	$2,360	$2,000	**$4,360**
1"	1.78	$4,201	$3,560	**$7,761**
1 ½"	4.00	$9,440	$8,000	**$17,440**
2"	7.11	$16,780	$14,220	**$31,000**
3"	16.00	$37,760	$32,000	**$69,760**
4"	28.44	$67,118	$56,880	**$123,998**
6"	64.00	$151,040	$128,000	**$279,040**

2. REGULATORY REQUIREMENTS

1. General

To assure the protection of public health, water suppliers are required to comply with Oregon Administrative Rule (OAR) 333, Division 61. OAR 333-61 identifies:

- *The Responsibilities of Water Suppliers; (25)*
- *Maximum Chemical, Physical and Microbiological Contaminant Levels; (30,31)*
- *Treatment Requirements and Performance Standards for Source Waters; (32)*
- *Treatment Requirements and Performance Standards for Corrosion Control; (34)*
- *Sampling and Analytical Requirements; (36)*
- *Reporting and Record Keeping; (40)*
- *Public Notice Requirements; (42)*
- *Consumer Confidence Reports; (43)*
- *Construction Standards; (50)*
- *Plan Submission and Review Requirements; (60)*
- *Operation and Maintenance; (65) and*
- *Cross Connection Control Requirements.* (70)

2. Responsibilities of Water Suppliers

It is the responsibility of water purveyors to assure that water delivered to customers does not exceed State mandated maximum contaminant levels. The system must also be operated and maintained in accordance with the rules of Oregon Department of Human Services (ODHS). Briefly these rules require:

- *Routine collection and submittal of water samples for laboratory analysis;*
- *Corrective actions when analysis or measurements indicate an exceedance of a maximum contaminant level (MCL);*
- *Reporting laboratory analysis results;*
- *Public notification of MCL exceedances, the existence of public health hazards in the system and reporting deficiencies;*
- *Maintenance of monitoring and reporting records;*
- *Maintenance of a minimum operating pressure of 20 pounds per square inch (psi) at all service connections;*
- *Follow-up on water quality complaints;*
- *Establishment and implementation of a program to identify and control cross connections; and*
- *Certified water system operators.*
- *Preparation and distribution of annual Consumer Confidence Reports.*

3. Treatment

OAR 333-61-032 establishes treatment requirements and performance standards for surface water, and groundwater under surface water influence. The City of Estacada utilizes one permitted surface water source. Surface water must be filtered and disinfected under the Enhanced Surface Water Treatment Rule (SWTR).

4. Chemical, Physical and Microbiological Contaminant Levels

Surface water sources must not exceed the water quality Maximum Contaminant Levels (MCLs) established in OAR 333-61-030 for microbial contaminants, inorganic, synthetic organic and volatile organic chemicals, and radiological contaminants. This section also establishes limits for secondary contaminants which are based on non-health related effects such as taste and aesthetics. A complete listing of contaminants and MCLs is included in Appendix A of this report. The following is a summary of contaminants and water quality status for the system.

Microbial Contaminants - Total Coliform Bacteria is the primary measure of the microbial quality of drinking water. The presence of total coliform bacteria is only an indicator of the possible presence of pathogenic or disease-causing microorganisms. In the event testing for total coliforms is positive, additional sampling is performed to determine the presence of fecal coliforms and *E. coli*. The minimum required sampling frequency for a water system serving a population up to 2,500 is two samples per month, and three samples per month for a population up to 3,300. The number of repeat samples required in the event of positive results is three if the system routinely collects more than one sample per month. Positive results in the repeat samples trigger an additional set of repeat samples for each positive.

During the past ten years, no positive total coliform results were reported.

Inorganic Chemicals (IOC) - Inorganic contaminants include metals and minerals; both naturally-occurring and resulting from agricultural or industrial use. Testing for IOCs is required annually at a minimum for surface water sources. In addition, nitrate and nitrite must be tested quarterly for surface water sources. Asbestos samples must be taken every 9 years for systems with asbestos-cement water pipes. IOC test results have been consistently below the MCLs.

Synthetic Organic Chemicals (SOCs) - Synthetic organic contaminants include pesticides, herbicides, insecticides and other agricultural chemicals. Testing for SOCs is required a minimum of once each year for surface water sources. Results from the last round of SOC testing were consistently below the MCLs.

Volatile Organic Chemicals (VOCs) - Volatile organic contaminants include many industrial chemicals. Testing for VOCs is required for a minimum of four consecutive quarters for surface water sources. Results from the last round of VOC testing were consistently below the MCLs.

Radiologic Contaminants - Radiologic contaminants include those of both natural and man-made origin. The last round of radiologic contaminant testing showed results well below MCLs. Additional monitoring is required every 4 years.

Secondary Contaminants - Secondary contaminants include constituents which have primarily non-health related effects on drinking water. Examples include properties such as color, taste, iron and hardness.

Lead and Copper - While lead and copper are naturally present in geologic deposits, measurable concentrations present in residential drinking water are primarily from corrosion of plumbing and plumbing fixtures in homes and buildings. Performance standards for lead and copper corrosion controls are identified in OAR 333-61-034. The action level for copper is 1.3 mg/L; lead action level is 0.015 mg/L.

Under OAR 333-61-034, the City of Estacada water system is identified as a small system (serving fewer than 3,300 persons). Sampling requirements mandate the analysis of water samples taken at the consumer's taps..

Turbidity - Turbidity is primarily caused by silt suspended in the source waters resulting from heavy rainfall. Particulates that cause turbidity may interfere with disinfection and affect taste. The current absolute maximum MCL for turbidity is 1 NTU. If the raw water turbidity exceeds 25 NTU, the two plate filters cannot meet the MCL. When this occurs, the City must divert the filtered water to the backwash waste pond until turbidity in the raw water decreases. The MCLs that became effective January 1, 2005 lowered turbidity limits to 0.3 NTU for 95% of samples collected and 1 NTU for all samples collected.

5. Sampling and Analytical Requirements

OAR 333-61-036 sets forth sampling and analytical requirements for water systems. In accordance with this section:

- *All analyses must be conducted by EPA (Environmental Protection Agency) Approved Methods;*
- *All Samples must be tested by a Health Division approved laboratory;*
- *Compliance with MCLs is to be based on each sampling point;*
- *The Health Division may require additional sampling for contaminants in OAR 333-61-0030 or contaminants not in OAR-333-61-0030 when necessary to determine whether an unreasonable risk to health exists.*
- *To assure compliance with Health Division regulations, routine water samples are to be collected from locations within the distribution and treatment system. Samples are taken at specified frequencies using proper procedures and techniques to assure representative water quality sampling.*

State violation data obtained from the Oregon Department of Human Services for the period from 1994 through 2005 identified minor rule violations. The breakdown of violations are as follows:

Routine Coliform Samples:

- *Initial Tap Sampling for Lead and Copper - One violation (1994)*
  Lead and Copper Rule
- *No Report for a Surface Water System - One violation (2004)*
  Surface Water Treatment Rule
- *Chemical Late/NonReporting - One violation (2005)*

These violations did not pose a serious threat to public health. One enforcement action was taken by the ODHS as a result of these violations; in May 1994 the ODHS initiated an administrative order for the City to come into compliance with the Surface Water Treatment Rules. The City came into compliance in March 2002. All other requirements were satisfied by 2006.

6. Reporting and Record Keeping

Reporting and record maintenance requirements are identified in OAR 333-61-0040. Records are to be maintained relating to the quality of the water produced and the physical condition of the system components. The record keeping requirements are identified in Appendix B.

As of April 2006, accredited laboratories must submit analytical results exceeding established drinking water maximum contaminant level standards within 24 hours to the Department of Human Services - Drinking Water Program.

MCL categories to be reported include:

- *Bacteriological*
- *Inorganic chemicals*
- *Synthetic organic chemicals*
- *Volatile organic chemicals*
- *Disinfection by-products*
- *Radionuclides*

Lead and copper action levels are excluded as well as treatment technique standards.

7. Future Regulatory Requirements

The Drinking Water Section of the ODHS is responsible for administering state and federal drinking water laws in Oregon under the Oregon Drinking Water Quality Act, ORS Chapter 448. The 1996 Federal Safe Drinking Water Act mandated new and revised drinking water quality standards.

Unfortunately, it is difficult to accurately predict schedules for implementation of many of the proposed drinking water quality standards because they are continually evolving in response to public input, and unanticipated delays in the rule making and adoption process. However, anticipated implementation of additional water quality standards are expected to result in the following:

Microbial Standards - Additional protections against pathogenic organisms in both groundwater and surface water supplies have been proposed. The primary additional organism of concern is Cryptosporidium in surface water supplies, though monitoring will be extended to additional pathogenic organisms and/or indicator organisms.

Disinfectants and Disinfection By-products (DBP) - Further reductions in the exposure of people to disinfectant residuals and disinfection by-products are proposed. Revised standards will address the identification of probable peak disinfection by-product locations and control. DBP Stage 1 requires water systems to monitor and control the average levels of DBP precursor chemicals. Stage 2 regulations will monitor and control DBP at specific locations within the distribution system. These standards are scheduled to go into effect in Oregon by January 2010.

Arsenic - New standards reduce the MCL for arsenic to 0.01 mg/l. The effective date of the final rule is January 2006.

Radon - Proposed standards would reduce exposure of people to both indoor air radon and radon in drinking water. Radon is a naturally occurring gas formed from the decay of uranium-238, entering homes from the soil and source water through groundwater withdrawals. Periodic monitoring would be required by all community water systems using groundwater sources. Final ruling by the EPA is expected in 2009.

Drinking Water Contaminant Candidate List (DWCCL) - The DWCCL identifies chemical and microbiological contaminants known or anticipated to occur in public water systems for possible future regulation. The first DWCCL was published in 1998 and revised in 2005. This list includes contaminants determined to be regulatory priorities and additional contaminants which require additional occurrence data or research on health, treatment and/or analytical methods. Every five years EPA must select at least five of the listed contaminants for regulatory review and determine whether or not to regulate them. The list is then updated following this determination.

Table 19. City of Estacada
Drinking Water Contaminant Candidate List

Contaminant	Classification	Contaminant	Classification
Adenoviruses	Microbiological	Boron	Chemical
Aeromonas hydrophila	Microbiological	Bromobenzene	Chemical
Caliciviruses	Microbiological	DCPA mono-acid degradate	Chemical
Coxsackieviruses	Microbiological	DCPA di-acid degradate	Chemical
Cyanobacteria (blue-green algae), other freshwater algae, and their toxins	Microbiological	DDE	Chemical
Echoviruses	Microbiological	Diazinon	Chemical
Helicobacter pylori	Microbiological	Disulfoton	Chemical
Microsporidia (Enterocytozoon & Septata)	Microbiological	Diuron	Chemical
Mycobacterium avium intracellulare (MAC)	Microbiological	EPTC (s-ethyl-dipropylthiocarbamate)	Chemical
1,1,2,2-tetrachloroethane	Chemical	Fonofos	Chemical
1,2,4-trimethylbenzene	Chemical	p-Isopropyltoluene (p-cymene)	Chemical
1,1-dichloroethane	Chemical	Linuron	Chemical
1,1-dichloropropene	Chemical	Methyl bromide	Chemical
1,2-diphenylhydrazine	Chemical	Methyl-t-butyl ether (MTBE)	Chemical
1,3-dichloropropane	Chemical	Metolachlor	Chemical
1,3-dichloropropene	Chemical	Molinate	Chemical
2,4,6-trichlorophenol	Chemical	Nitrobenzene	Chemical
2,2-dichloropropane	Chemical	Organotins	Chemical
2,4-dichlorophenol	Chemical	Perchlorate	Chemical
2,4-dinitrophenol	Chemical	Prometon	Chemical
2,4-dinitrotoluene	Chemical	RDX	Chemical
2,6-dinitrotoluene	Chemical	Terbacil	Chemical
2-methyl-Phenol (o-cresol)	Chemical	Terbufos	Chemical
Acetochlor	Chemical	Triazines & degradation products of triazines including, but not limited to Cyanazine and atrazine-desethyl	Chemical
Alachlor ESA & other acetanilide pesticide degradation products	Chemical	Vanadium	Chemical
Aluminum	Chemical		

APPENDIX A

EPA National Primary Drinking Water Standards

	Contaminant	MCL or TT[1] (mg/L)[2]	Potential health effects from exposure above the MCL	Common sources of contaminant in drinking water	Public Health Goal
OC	Acrylamide	TT[8]	Nervous system or blood problems;	Added to water during sewage/wastewater increased risk of cancer treatment	zero
OC	Alachlor	0.002	Eye, liver, kidney or spleen problems; anemia; increased risk of cancer	Runoff from herbicide used on row crops	zero
R	Alpha particles	15 picocuries per Liter (pCi/L)	Increased risk of cancer	Erosion of natural deposits of certain minerals that are radioactive and may emit a form of radiation known as alpha radiation	zero
IOC	Antimony	0.006	Increase in blood cholesterol; decrease in blood sugar	Discharge from petroleum refineries; fire retardants; ceramics; electronics; solder	0.006
IOC	Arsenic	0.010 as of 1/23/06	Skin damage or problems with circulatory systems, and may have increased risk of getting cancer	Erosion of natural deposits; runoff from orchards, runoff from glass & electronics production wastes	0
IOC	Asbestos (fibers >10 micrometers)	7 million fibers per Liter (MFL)	Increased risk of developing benign intestinal polyps	Decay of asbestos cement in water mains; erosion of natural deposits	7 MFL
OC	Atrazine	0.003	Cardiovascular system or reproductive problems	Runoff from herbicide used on row crops	0.003
IOC	Barium	2	Increase in blood pressure	Discharge of drilling wastes; discharge from metal refineries; erosion of natural deposits	2
OC	Benzene	0.005	Anemia; decrease in blood platelets; increased risk of cancer	Discharge from factories; leaching from gas storage tanks and landfills	zero
OC	Benzo(a)pyrene (PAHs)	0.0002	Reproductive difficulties; increased risk of cancer	Leaching from linings of water storage tanks and distribution lines	zero
IOC	Beryllium	0.004	Intestinal lesions	Discharge from metal refineries and coal-burning factories; discharge from electrical, aerospace, and defense industries	0.004
R	Beta particles and photon emitters	4 millirems per year	Increased risk of cancer	Decay of natural and man-made deposits of certain minerals that are radioactive and may emit forms of radiation known as photons and beta radiation	zero
DBP	Bromate	0.010	Increased risk of cancer	Byproduct of drinking water disinfection	zero
IOC	Cadmium	0.005	Kidney damage	Corrosion of galvanized pipes; erosion of natural deposits; discharge from metal refineries; runoff from waste batteries and paints	0.005
OC	Carbofuran	0.04	Problems with blood, nervous system, or reproductive system	Leaching of soil fumigant used on rice and alfalfa	0.04
OC	Carbon tetrachloride	0.005	Liver problems; increased risk of cancer	Discharge from chemical plants and other industrial activities	zero
D	Chloramines (as Cl_2)	MRDL=4.0[1]	Eye/nose irritation; stomach discomfort, anemia	Water additive used to control microbes	MRDLG=4[1]

LEGEND

D Dinsinfectant

DBP Disinfection Byproduct

IOC Inorganic Chemical

M Microorganism

OC Organic Chemical

R Radionuclides

	Contaminant	MCL or TT[1] (mg/L)[2]	Potential health effects from exposure above the MCL	Common sources of contaminant in drinking water	Public Health Goal
OC	Chlordane	0.002	Liver or nervous system problems; increased risk of cancer	Residue of banned termiticide	zero
D	Chlorine (as Cl_2)	MRDL=4.0[1]	Eye/nose irritation; stomach discomfort	Water additive used to control microbes	MRDLG=4[1]
D	Chlorine dioxide (as ClO_2)	MRDL=0.8[1]	Anemia; infants & young children: nervous system effects	Water additive used to control microbes	MRDLG=0.8[1]
DBP	Chlorite	1.0	Anemia; infants & young children: nervous system effects	Byproduct of drinking water disinfection	0.8
OC	Chlorobenzene	0.1	Liver or kidney problems	Discharge from chemical and agricultural chemical factories	0.1
IOC	Chromium (total)	0.1	Allergic dermatitis	Discharge from steel and pulp mills; erosion of natural deposits	0.1
IOC	Copper	TT[7]; Action Level = 1.3	Short term exposure: Gastrointestinal distress. Long term exposure: Liver or kidney damage. People with Wilson's Disease should consult their personal doctor if the amount of copper in their water exceeds the action level	Corrosion of household plumbing systems; erosion of natural deposits	1.3
M	*Cryptosporidium*	TT[3]	Gastrointestinal illness (e.g., diarrhea, vomiting, cramps)	Human and animal fecal waste	zero
IOC	Cyanide (as free cyanide)	0.2	Nerve damage or thyroid problems	Discharge from steel/metal factories; discharge from plastic and fertilizer factories	0.2
OC	2,4-D	0.07	Kidney, liver, or adrenal gland problems	Runoff from herbicide used on row crops	0.07
OC	Dalapon	0.2	Minor kidney changes	Runoff from herbicide used on rights of way	0.2
OC	1,2-Dibromo-3-chloropropane (DBCP)	0.0002	Reproductive difficulties; increased risk of cancer	Runoff/leaching from soil fumigant used on soybeans, cotton, pineapples, and orchards	zero
OC	o-Dichlorobenzene	0.6	Liver, kidney, or circulatory system problems	Discharge from industrial chemical factories	0.6
OC	p-Dichlorobenzene	0.075	Anemia; liver, kidney or spleen damage; changes in blood	Discharge from industrial chemical factories	0.075
OC	1,2-Dichloroethane	0.005	Increased risk of cancer	Discharge from industrial chemical factories	zero
OC	1,1-Dichloroethylene	0.007	Liver problems	Discharge from industrial chemical factories	0.007
OC	cis-1,2-Dichloroethylene	0.07	Liver problems	Discharge from industrial chemical factories	0.07
OC	trans-1,2-Dichloroethylene	0.1	Liver problems	Discharge from industrial chemical factories	0.1
OC	Dichloromethane	0.005	Liver problems; increased risk of cancer	Discharge from drug and chemical factories	zero
OC	1,2-Dichloropropane	0.005	Increased risk of cancer	Discharge from industrial chemical factories	zero
OC	Di(2-ethylhexyl) adipate	0.4	Weight loss, live problems, or possible reproductive difficulties	Discharge from chemical factories	0.4
OC	Di(2-ethylhexyl) phthalate	0.006	Reproductive difficulties; liver problems; increased risk of cancer	Discharge from rubber and chemical factories	zero
OC	Dinoseb	0.007	Reproductive difficulties	Runoff from herbicide used on soybeans and vegetables	0.007
OC	Dioxin (2,3,7,8-TCDD)	0.00000003	Reproductive difficulties; increased risk of cancer	Emissions from waste incineration and other combustion; discharge from chemical factories	zero
OC	Diquat	0.02	Cataracts	Runoff from herbicide use	0.02
OC	Endothall	0.1	Stomach and intestinal problems	Runoff from herbicide use	0.1

LEGEND

D — Dinsinfectant
DBP — Disinfection Byproduct
IOC — Inorganic Chemical
M — Microorganism
OC — Organic Chemical
R — Radionuclides

	Contaminant	MCL or TT[1] (mg/L)[2]	Potential health effects from exposure above the MCL	Common sources of contaminant in drinking water	Public Health Goal
OC	Endrin	0.002	Liver problems	Residue of banned insecticide	0.002
OC	Epichlorohydrin	TT[8]	Increased cancer risk, and over a long period of time, stomach problems	Discharge from industrial chemical factories; an impurity of some water treatment chemicals	zero
OC	Ethylbenzene	0.7	Liver or kidneys problems	Discharge from petroleum refineries	0.7
OC	Ethylene dibromide	0.00005	Problems with liver, stomach, reproductive system, or kidneys; increased risk of cancer	Discharge from petroleum refineries	zero
IOC	Fluoride	4.0	Bone disease (pain and tenderness of the bones); Children may get mottled teeth	Water additive which promotes strong teeth; erosion of natural deposits; discharge from fertilizer and aluminum factories	4.0
M	*Giardia lamblia*	TT[3]	Gastrointestinal illness (e.g., diarrhea, vomiting, cramps)	Human and animal fecal waste	zero
OC	Glyphosate	0.7	Kidney problems; reproductive difficulties	Runoff from herbicide use	0.7
DBP	Haloacetic acids (HAA5)	0.060	Increased risk of cancer	Byproduct of drinking water disinfection	n/a[6]
OC	Heptachlor	0.0004	Liver damage; increased risk of cancer	Residue of banned termiticide	zero
OC	Heptachlor epoxide	0.0002	Liver damage; increased risk of cancer	Breakdown of heptachlor	zero
M	Heterotrophic plate count (HPC)	TT[3]	HPC has no health effects; it is an analytic method used to measure the variety of bacteria that are common in water. The lower the concentration of bacteria in drinking water, the better maintained the water system is.	HPC measures a range of bacteria that are naturally present in the environment	n/a
OC	Hexachlorobenzene	0.001	Liver or kidney problems; reproductive difficulties; increased risk of cancer	Discharge from metal refineries and agricultural chemical factories	zero
OC	Hexachlorocyclopentadiene	0.05	Kidney or stomach problems	Discharge from chemical factories	0.05
IOC	Lead	TT[7]; Action Level = 0.015	Infants and children: Delays in physical or mental development; children could show slight deficits in attention span and learning abilities; Adults: Kidney problems; high blood pressure	Corrosion of household plumbing systems; erosion of natural deposits	zero
M	*Legionella*	TT[3]	Legionnaire's Disease, a type of pneumonia	Found naturally in water; multiplies in heating systems	zero
OC	Lindane	0.0002	Liver or kidney problems	Runoff/leaching from insecticide used on cattle, lumber, gardens	0.0002
IOC	Mercury (inorganic)	0.002	Kidney damage	Erosion of natural deposits; discharge from refineries and factories; runoff from landfills and croplands	0.002
OC	Methoxychlor	0.04	Reproductive difficulties	Runoff/leaching from insecticide used on fruits, vegetables, alfalfa, livestock	0.04
IOC	Nitrate (measured as Nitrogen)	10	Infants below the age of six months who drink water containing nitrate in excess of the MCL could become seriously ill and, if untreated, may die. Symptoms include shortness of breath and blue-baby syndrome.	Runoff from fertilizer use; leaching from septic tanks, sewage; erosion of natural deposits	10
IOC	Nitrite (measured as Nitrogen)	1	Infants below the age of six months who drink water containing nitrite in excess of the MCL could become seriously ill and, if untreated, may die. Symptoms include shortness of breath and blue-baby syndrome.	Runoff from fertilizer use; leaching from septic tanks, sewage; erosion of natural deposits	1

LEGEND

D — Dinsinfectant
DBP — Disinfection Byproduct
IOC — Inorganic Chemical
M — Microorganism
OC — Organic Chemical
R — Radionuclides

	Contaminant	MCL or TT[1] (mg/L)[2]	Potential health effects from exposure above the MCL	Common sources of contaminant in drinking water	Public Health Goal
OC	Oxamyl (Vydate)	0.2	Slight nervous system effects	Runoff/leaching from insecticide used on apples, potatoes, and tomatoes	0.2
OC	Pentachlorophenol	0.001	Liver or kidney problems; increased cancer risk	Discharge from wood preserving factories	zero
OC	Picloram	0.5	Liver problems	Herbicide runoff	0.5
OC	Polychlorinated biphenyls (PCBs)	0.0005	Skin changes; thymus gland problems; immune deficiencies; reproductive or nervous system difficulties; increased risk of cancer	Runoff from landfills; discharge of waste chemicals	zero
R	Radium 226 and Radium 228 (combined)	5 pCi/L	Increased risk of cancer	Erosion of natural deposits	zero
IOC	Selenium	0.05	Hair or fingernail loss; numbness in fingers or toes; circulatory problems	Discharge from petroleum refineries; erosion of natural deposits; discharge from mines	0.05
OC	Simazine	0.004	Problems with blood	Herbicide runoff	0.004
OC	Styrene	0.1	Liver, kidney, or circulatory system problems	Discharge from rubber and plastic factories; leaching from landfills	0.1
OC	Tetrachloroethylene	0.005	Liver problems; increased risk of cancer	Discharge from factories and dry cleaners	zero
IOC	Thallium	0.002	Hair loss; changes in blood; kidney, intestine, or liver problems	Leaching from ore-processing sites; discharge from electronics, glass, and drug factories	0.0005
OC	Toluene	1	Nervous system, kidney, or liver problems	Discharge from petroleum factories	1
M	Total Coliforms (including fecal coliform and *E. coli*)	5.0%[4]	Not a health threat in itself; it is used to indicate whether other potentially harmful bacteria may be present[5]	Coliforms are naturally present in the environment as well as feces; fecal coliforms and *E. coli* only come from human and animal fecal waste.	zero
DBP	Total Trihalomethanes (TTHMs)	0.10 0.080 after 12/31/03	Liver, kidney or central nervous system problems; increased risk of cancer	Byproduct of drinking water disinfection	n/a[6]
OC	Toxaphene	0.003	Kidney, liver, or thyroid problems; increased risk of cancer	Runoff/leaching from insecticide used on cotton and cattle	zero
OC	2,4,5-TP (Silvex)	0.05	Liver problems	Residue of banned herbicide	0.05
OC	1,2,4-Trichlorobenzene	0.07	Changes in adrenal glands	Discharge from textile finishing factories	0.07
OC	1,1,1-Trichloroethane	0.2	Liver, nervous system, or circulatory problems	Discharge from metal degreasing sites and other factories	0.20
OC	1,1,2-Trichloroethane	0.005	Liver, kidney, or immune system problems	Discharge from industrial chemical factories	0.003
OC	Trichloroethylene	0.005	Liver problems; increased risk of cancer	Discharge from metal degreasing sites and other factories	zero
M	Turbidity	TT[3]	Turbidity is a measure of the cloudiness of water. It is used to indicate water quality and filtration effectiveness (e.g., whether disease-causing organisms are present). Higher turbidity levels are often associated with higher levels of disease-causing micro-organisms such as viruses, parasites and some bacteria. These organisms can cause symptoms such as nausea, cramps, diarrhea, and associated headaches.	Soil runoff	n/a
R	Uranium	30 ug/L as of 12/08/03	Increased risk of cancer, kidney toxicity	Erosion of natural deposits	zero

LEGEND

D — Dinsinfectant
DBP — Disinfection Byproduct
IOC — Inorganic Chemical
M — Microorganism
OC — Organic Chemical
R — Radionuclides

	Contaminant	MCL or TT[1] (mg/L)[2]	Potential health effects from exposure above the MCL	Common sources of contaminant in drinking water	Public Health Goal
OC	Vinyl chloride	0.002	Increased risk of cancer	Leaching from PVC pipes; discharge from plastic factories	zero
[illegible]	Viruses (enteric)	TT[3]	Gastrointestinal illness (e.g., diarrhea, vomiting, cramps)	Human and animal fecal waste	zero
OC	Xylenes (total)	10	Nervous system damage	Discharge from petroleum factories; discharge from chemical factories	10

NOTES

1 Definitions

- Maximum Contaminant Level Goal (MCLG)—The level of a contaminant in drinking water below which there is no known or expected risk to health. MCLGs allow for a margin of safety and are non-enforceable public health goals.
- Maximum Contaminant Level (MCL)—The highest level of a contaminant that is allowed in drinking water. MCLs are set as close to MCLGs as feasible using the best available treatment technology and taking cost into consideration. MCLs are enforceable standards.
- Maximum Residual Disinfectant Level Goal (MRDLG)—The level of a drinking water disinfectant below which there is no known or expected risk to health. MRDLGs do not reflect the benefits of the use of disinfectants to control microbial contaminants.
- Maximum Residual Disinfectant Level (MRDL)—The highest level of a disinfectant allowed in drinking water. There is convincing evidence that addition of a disinfectant is necessary for control of microbial contaminants.
- Treatment Technique (TT)—A required process intended to reduce the level of a contaminant in drinking water.

2 Units are in milligrams per liter (mg/L) unless otherwise noted. Milligrams per liter are equivalent to parts per million (ppm).

3 EPA's surface water treatment rules require systems using surface water or ground water under the direct influence of surface water to (1) disinfect their water, and (2) filter their water or meet criteria for avoiding filtration so that the following contaminants are controlled at the following levels:

- *Cryptosporidium* (as of 1/1/02 for systems serving >10,000 and 1/14/05 for systems serving <10,000) 99% removal.
- *Giardia lamblia*: 99.9% removal/inactivation
- Viruses: 99.99% removal/inactivation
- *Legionella:* No limit, but EPA believes that if *Giardia* and viruses are removed/inactivated, *Legionella* will also be controlled.
- Turbidity: At no time can turbidity (cloudiness of water) go above 5 nephelometric turbidity units (NTU); systems that filter must ensure that the turbidity go no higher than 1 NTU (0.5 NTU for conventional or direct filtration) in at least 95% of the daily samples in any month. As of January 1, 2002, for systems servicing >10,000, and January 14, 2005, for systems servicing <10,000, turbidity may never exceed 1 NTU, and must not exceed 0.3 NTU in 95% of daily samples in any month.
- HPC: No more than 500 bacterial colonies per milliliter
- Long Term 1 Enhanced Surface Water Treatment (Effective Date: January 14, 2005); Surface water systems or (GWUDI) systems serving fewer than 10,000 people must comply with the applicable Long Term 1 Enhanced Surface Water Treatment Rule provisions (e.g. turbidity standards, individual filter monitoring, *Cryptosporidium* removal requirements, updated watershed control requirements for unfiltered systems).
- Filter Backwash Recycling: The Filter Backwash Recycling Rule requires systems that recycle to return specific recycle flows through all processes of the system's existing conventional or direct filtration system or at an alternate location approved by the state.

4 No more than 5.0% samples total coliform-positive in a month. (For water systems that collect fewer than 40 routine samples per month, no more than one sample can be total coliform-positive per month.) Every sample that has total coliform must be analyzed for either fecal coliforms or *E. coli* if two consecutive TC-positive samples, and one is also positive for *E. coli* fecal coliforms, system has an acute MCL violation.

5 Fecal coliform and *E. coli* are bacteria whose presence indicates that the water may be contaminated with human or animal wastes. Disease-causing microbes (pathogens) in these wastes can cause diarrhea, cramps, nausea, headaches, or other symptoms. These pathogens may pose a special health risk for infants, young children, and people with severely compromised immune systems.

6 Although there is no collective MCLG for this contaminant group, there are individual MCLGs for some of the individual contaminants:

- Haloacetic acids: dichloroacetic acid (zero); trichloroacetic acid (0.3 mg/L)
- Trihalomethanes: bromodichloromethane (zero); bromoform (zero); dibromochloromethane (0.06 mg/L)

7 Lead and copper are regulated by a Treatment Technique that requires systems to control the corrosiveness of their water. If more than 10% of tap water samples exceed the action level, water systems must take additional steps. For copper, the action level is 1.3 mg/L, and for lead is 0.015 mg/L.

8 Each water system must certify, in writing, to the state (using third-party or manufacturers certification) that when it uses acrylamide and/or epichlorohydrin to treat water, the combination (or product) of dose and monomer level does not exceed the levels specified, as follows: Acrylamide = 0.05% dosed at 1 mg/L (or equivalent); Epichlorohydrin = 0.01% dosed at 20 mg/L (or equivalent).

LEGEND

D	Disinfectant	[illegible]	Inorganic Chemical	OC	Organic Chemical
DBP	Disinfection Byproduct	[illegible]	Microorganism	R	Radionuclides

National Secondary Drinking Water Standards

National Secondary Drinking Water Standards are non-enforceable guidelines regulating contaminants that may cause cosmetic effects (such as skin or tooth discoloration) or aesthetic effects (such as taste, odor, or color) in drinking water. EPA recommends secondary standards to water systems but does not require systems to comply. However, states may choose to adopt them as enforceable standards.

Contaminant	Secondary Standard
Aluminum	0.05 to 0.2 mg/L
Chloride	250 mg/L
Color	15 (color units)
Copper	1.0 mg/L
Corrosivity	noncorrosive
Fluoride	2.0 mg/L
Foaming Agents	0.5 mg/L
Iron	0.3 mg/L
Manganese	0.05 mg/L
Odor	3 threshold odor number
pH	6.5-8.5
Silver	0.10 mg/L
Sulfate	250 mg/L
Total Dissolved Solids	500 mg/L
Zinc	5 mg/L

Office of Water (4606M)
EPA 816-F-03-016
www.epa.gov/safewater
June 2003

Appendix B

333-061-0040

1. **Reporting and Record Keeping**

(1) Reporting requirements:

(a) Any person who has reasonable cause to believe that his or her actions have led to contamination of a public water system shall report that fact immediately to the water supplier and the Department.

(b) Results of analyses required by OAR 333-061-0036 and performed by an approved laboratory shall be reported to the Department by the water supplier, unless direct laboratory reporting is authorized by the water supplier, within 10 days after the end of the month, or within 10 days after the end of the required monitoring period, except that analyses indicating any positive coliform bacteria or any other analytical result which exceeds a maximum contaminant level shall be reported to the Department within (24) hours or by the next business day after the results are reported to the water supplier.

(c) If the water system fails to conduct monitoring as required in 333-061-0036 the water system must notify the public as prescribed in 333-061-0042.

(d) The water supplier shall report to the Department within (24) hours the reports on any substance or pathogenic organisms found in the water that has caused or is likely to cause physical suffering or illness.

(e) The water supplier using a surface water source or a groundwater source under direct influence of surface water which provides filtration treatment shall report monthly beginning June 29, 1993 or when filtration is installed, whichever is later, to the Department the results of any test, measurement or analysis required by these rules that is performed on site (e.g., turbidity, "CT" parameters and the lowest disinfectant residual concentrations entering the distribution system and in the distribution system for each day), by trained personnel within 10 days after the end of the month.

(A) All systems using surface water or groundwater under the direct influence of surface water shall consult with the Department within twenty-four (24) hours, after learning:

(i) That the turbidity exceeded 5 NTU;

(ii) Of a waterborne disease outbreak potentially attributable to that water system;

(iii) That the disinfectant residual concentration in the water entering the distribution system fell below 0.2 mg/l and whether or not the residual was restored to at least 0.2 mg/l within four hours.

(B) In addition to the reporting and recordkeeping requirements in paragraph (1)(e)(A) of this rule, a public water system which provides conventional filtration treatment or direct filtration serving at least 10,000 people must report monthly to the Department the information specified in paragraphs (B)(i) and (ii) of this subsection. Public water systems which provide filtration treatment other than conventional filtration treatment, direct filtration, slow sand filtration, and diatomaceous earth filtration, regardless of population served, must also meet the requirements of paragraph (1)(e)(A) of this rule and must report monthly to the Department the information specified in paragraph (B)(i) of this subsection.

(i) Turbidity measurements as required by OAR 333-061-0030(3) must be reported within 10 days after the end of each month the system serves water to the public. Information that must be reported includes:

(I) The total number of filtered water turbidity measurements taken during the month;

(II) The number and percentage of filtered water turbidity measurements taken during the month which are less than or equal to the turbidity limits specified by OAR 333-061-0030(3)(b)(A) through (D) ;

(III) The date and value of any turbidity measurements taken during the month which exceed 1 NTU for systems using conventional filtration treatment or direct filtration, or which exceed the maximum level set by the Department specified in OAR 333-061-0030(3)(b)(D).

(ii) Water systems must maintain the results of individual filter monitoring for at least three years. Water systems must report that they have conducted individual filter turbidity monitoring within 10 days after the end of each month the system serves water to the public. Water systems must also report individual filter turbidity measurement results within 10 days after the end of each month the system serves water to the public only if measurements demonstrate one or more of the conditions in paragraphs (B)(ii)(I) through (IV) of this subsection. Water systems that use lime softening may apply to the Department for alternative exceedance levels for the levels specified in paragraphs (B)(ii)(I) through (IV) of this subsection if the water system can demonstrate that higher turbidity levels in individual filters are due to lime carryover only and not due to degraded filter performance.

(I) For any individual filter that has a measured turbidity level of greater than 1.0 NTU in two consecutive measurements taken 15 minutes apart, the water system must report the filter number, the turbidity measurement, and the date(s) on which the exceedance occurred. In addition, the water system must either produce a filter profile for the filter within 7 days of the exceedance (if the water system is not able to identify an obvious reason for the abnormal filter performance) and report that the profile has been produced or report the obvious reason for the exceedance.

(II) For any individual filter that has a measured turbidity level of greater than 0.5 NTU in two consecutive measurements taken 15 minutes apart at the end of the first four hours of continuous filter operation after the filter has been backwashed or otherwise taken offline, the system must report the filter number, the turbidity, and the date(s) on which the exceedance occurred. In addition, the system must either produce a filter profile for the filter within 7 days of the exceedance (if the system is not able to identify an obvious reason for the abnormal filter performance) and report that the profile has been produced or report the obvious reason for the exceedance.

(III) For any individual filter that has a measured turbidity level of greater than 1.0 NTU in two consecutive measurements taken 15 minutes apart at any time in each of three consecutive months, the water system must report the filter number, the turbidity measurement, and the date(s) on which the exceedance occurred. In addition, the water system must conduct a self-assessment of the filter within 14 days of the exceedance and report that the self-assessment was conducted. The self assessment must consist of at least the following components: assessment of filter performance; development of a filter profile; identification and prioritization of factors limiting filter performance; assessment of the applicability of corrections; and preparation of a filter self-assessment report.

(IV) For any individual filter that has a measured turbidity level of greater than 2.0 NTU in two consecutive measurements taken 15 minutes apart at any time in each of two consecutive months, the water system must report the filter number, the turbidity measurement, and the date(s) on which the exceedance occurred. In addition, the water system must arrange to have a comprehensive performance evaluation by the Department or a third party approved by the Department conducted no later than 30 days following the exceedance and have the evaluation completed and submitted to the Department no later than 90 days following the exceedance.

(iii) If at any time the turbidity exceeds 1 NTU in representative samples of filtered water in a system using conventional filtration treatment or direct filtration, the system must inform the Department as soon as possible, but no later than the end of the next business day.

(iv) If at any time the turbidity in representative samples of filtered water exceed the maximum level set by the Department as specified in OAR 333-061-0030(3)(b)(D) for filtration technologies other than conventional filtration treatment, direct filtration, slow sand filtration, or diatomaceous earth filtration, the water system must inform the Department as soon as possible, but no later than the end of the next business day.

(C) In addition to the reporting and recordkeeping requirements in paragraph (1)(e)(A) of this rule, a public water system which provides conventional filtration treatment or direct filtration treatment serving less than 10,000 people must report monthly to the Department the information specified in paragraphs (1)(e)(B)(i) of this rule and beginning January 1, 2005 the information specified in (1)(e)(C)(i) of this rule. Public water systems which provide filtration treatment other than conventional filtration treatment, direct filtration, slow sand filtration, and diatomaceous earth filtration regardless of population served must also meet the requirements of (1)(e)(A) of this rule and must report monthly to the Department the information specified in paragraph (B)(i) of this subsection.

(i) Water systems must maintain the results of individual filter monitoring for at least three years. Water systems must report that they have conducted individual filter turbidity monitoring within 10 days after the end of each month the system serves water to the public. Water systems must also report individual filter turbidity measurement results within 10 days after the end of each month the system serves water to the public only if measurements demonstrate one or more of the conditions in paragraphs (C)(i)(I) through (III) of this subsection. Water systems that use lime softening may apply to the Department for alternative exceedance levels for the levels specified in paragraphs (C)(i)(I) through (III) of this subsection if the water system can demonstrate that higher turbidity levels in individual filters are due to lime carryover only and not due to degraded filter performance.

(I) If the turbidity of an individual filter (or the turbidity of the combined filter effluent (CFE) for systems with 2 or less filters that monitor CFE in lieu of individual filter monitoring) is greater than 1.0 NTU in two consecutive measurements taken 15 minutes apart, the water system must report to the Department by the 10th day of the following month the filter number(s), the turbidity value(s) that exceeded 1.0 NTU, the corresponding date(s) of occurrence, and the cause (if known) for the elevated turbidity values. The Department may request the water system produce a turbidity profile for the filter(s) in question.

(II) If the turbidity of an individual filter (or the turbidity of the combined filter effluent (CFE) for systems with 2 or less filters that monitor CFE in lieu of individual filter monitoring) is greater than 1.0 NTU in two consecutive measurements taken 15 minutes apart for 3 consecutive months, the water system must conduct a filter self-assessment within 14 days of the date the turbidity exceeded 1.0 NTU during the third month, unless a CPE is performed in lieu of a filter self-assessment. Systems with 2 filters monitoring the CFE must conduct a filter self-assessment for both filters. The self-assessment must consist of the following components: assessment of filter performance; development of a filter profile; identification and prioritization of factors limiting filter performance; assessment of the applicability of corrections; and preparation of a filter self-assessment report. When a self-assessment is required, the water system must report the date the self-assessment was triggered, the date the self-assessment was completed, and the conclusion(s) of the self-assessment by the 10th of the following month or 14 days after the self-assessment was triggered only if the self-assessment was triggered during the last four days of the month.

(III) If the turbidity of an individual filter (or the turbidity of the combined filter effluent (CFE) for systems with

2 or less filters that monitor CFE in lieu of individual filter monitoring) is greater than 2.0 NTU in two consecutive measurements taken 15 minutes apart for 2 consecutive months, the water system must report these turbidity results to the Department by the 10th of the following month and arrange to have a comprehensive performance evaluation (CPE) by the Department or a third party approved by the Department conducted within 60 days of the date the turbidity exceeded 2.0 NTU during the second month. The CPE report must be submitted to the Department no later than 120 days following the date the turbidity exceeded 2.0 NTU during the second month. A CPE is not needed if the Department or approved third party has conducted a CPE within the last 12 months or the Department and the water system are jointly participating in an on-going Comprehensive Technical Assistance (CTA) project as part of the Composite Correction Program with the water system. When a CPE is required, the water system must report that a CPE is required and the date that the CPE was triggered by the 10th day of the following month.

(f) The water supplier using a surface water source or a groundwater source under direct influence of a surface source which does not provide filtration treatment shall report according to subsection (1)(e) of this rule in addition to the requirements of this subsection. Monthly reporting to the Department will begin January 1, 1991 for systems using surface water sources and January 1, 1991 or 6 months after the Department determines surface influence for systems using groundwater under the direct influence of surface water.

(A) Report to the Department within 10 days after the end of each month, the results or analysis of:

(i) Fecal coliform and/or total coliform bacteria test results on raw (untreated) source water.

(ii) Daily disinfection "CT" values including parameters such as pH measurements, temperature, and disinfectant residuals at the first customer used to compute the "CT" values.

(iii) Daily determinations using the "CT" values of the adequacy of disinfectant available for inactivation of Giardia lamblia or viruses as specified in OAR 333-061-0032(1)(a).

(B) Report to the Department within 10 days after the end of each Federal Fiscal year (September 30), the results of:

(i) The watershed control program requirements as specified in OAR 333-061-0032(2)(c)(B).

(ii) The on-site inspection summary requirements as specified in OAR 333-061-0032(2)(c)(C).

(g) All Community and Non-Transient Non-Community public water systems shall report all of the following information pertaining to lead and copper to the Department in accordance with the requirements of this subsection.

(A) Except as provided in subparagraph (vii) of this paragraph, a public water system shall report the information below for all tap water samples and for all water quality parameter samples within 10 days following the end of each applicable monitoring period.

(i) The results of all tap samples for lead and copper including the location of each site and the criteria under which the site was selected for the system's sampling pool. With the exception of initial tap sampling, the system shall designate any site which was not sampled during previous monitoring periods, and include an explanation of why sampling sites have changed. By the applicable date specified in OAR 333-061-0036(2)(d)(D)(i) for commencement of initial monitoring, each Community Water System which does not complete its targeted sampling pool meeting the criteria for tier 1 sampling sites shall send a letter to the Department justifying its selection of tier 2 and/or tier 3 sampling sites. By the applicable date specified in OAR 333-061-0036(2)(d)(D)(i) for commencement of initial monitoring, each Non-Transient Non-Community water system which does not complete its sampling pool meeting

the criteria for tier 1 sampling sites shall send a letter to the Department justifying its selection of sampling sites.

(ii) A certification that each first draw sample collected by the water system is one-liter in volume and, to the best of their knowledge, has stood motionless in the service line, or in the interior plumbing of a sampling site, for at least six hours. Where residents collected samples, a certification that each tap sample collected by the residents was taken after the water system informed them of proper sampling procedures according to OAR 333-061-0036(2)(d)(B)(ii).

(iii) The results of all tap samples for pH, and where applicable, alkalinity, calcium, conductivity, temperature, and orthophosphate or silica, and the results of all samples collected at the entry point(s) to the distribution system for applicable water quality parameters according to OAR 333-061-0036(2)(d)(F)(iii) through (vi).

(iv) Each water system that requests that the Department reduce the number and frequency of sampling shall provide the information required in OAR 333-061-0036(2)(d)(D)(iv).

(v) Documentation for each tap water lead and copper sample for which the water system requests invalidation.

(vi) The 90th percentile lead and copper tap water samples collected during each monitoring period.

(vii) A water system shall report the results of all water quality parameter samples collected for follow-up tap monitoring prescribed in OAR 333-061-0036(2)(d)(F)(iv) through (vii) during each six-month monitoring period within 10 days following the end of the monitoring period unless the Department specifies a more frequent monitoring requirement.

(B) A water system shall report the sampling results for all source water samples collected for lead and copper within the first 10 days following the end of each source water monitoring period according to OAR 333-061-0036(2)(d)(G).

(i) With the exception of the first round of source water sampling, the system shall specify any site which was not sampled during previous monitoring periods, and include an explanation of why the sampling point has changed.

(C) Corrosion control treatment reporting requirements. By the applicable dates according to OAR 333-061-0034(2)(a) through (e), systems shall report the following information: for systems demonstrating that they have already optimized corrosion control, the information required in OAR 333-061-0034(2)(d)(B) or (C); for systems required to optimize corrosion control, their recommendation regarding optimal corrosion control treatment according to OAR 333-061-0034(3)(a); for systems required to evaluate the effectiveness of corrosion control treatments, the information required in OAR 333-061-0034(3)(c) of these rules; for systems required to install optimal corrosion control designated by the Department according to OAR 333-061-0034(3)(i), a letter certifying that the system has completed the installation.

(D) Source water treatment reporting requirements. By the applicable dates according to OAR 333-061-0034(4)(a), systems shall report the following information to the Department: the system's recommendation regarding source water treatment if required according to OAR 333-061-0034(4)(b)(A); for systems required to install source water treatment according to OAR 333-061-0034(4)(b)(B), a letter certifying that the system has completed the installation of the treatment designated by the Department within 24 months after the Department designated the treatment.

(E) Public education program reporting requirements.

(i) Any water system that is subject to the public education requirements in OAR 333-061-0034(5) shall, within ten

days after the end of each period in which the system is required to perform public education tasks in accordance with OAR 333-061-0034(5)(d), send written documentation to the Department that contains:

(I) A demonstration that the system has delivered the public education materials that meet the content and delivery requirements specified in OAR 333-061-0034(5)(a) through (d); and

(II) A list of all the newspapers, radio stations, television stations, and facilities and organizations to which the system delivered public education materials during the period in which the system was required to perform public education tasks.

(ii) Unless required by the Department, a system that previously has submitted the information in subparagraph (i)(II) of this paragraph need not resubmit the information, as long as there have been no changes in the distribution list and the system certifies that the public education materials were distributed to the same list submitted previously.

(F) Any system which collects sampling data in addition to that required by this subsection shall report the results to the Department within the first ten days following the end of the applicable monitoring period under OAR 333-061-0036(2)(d)(A) through (H) during which the samples are collected.

(G) Any water system deemed to have optimized corrosion control or any water system subject to reduced monitoring, shall send written documentation to the Department describing the addition of any new source or change in treatment prior to implementation of the change.

(H) Each ground water system that limits water quality parameter monitoring to a subset of entry points shall provide written correspondence to the Department that identifies the selected entry points and includes information sufficient to demonstrate that the sites are representative of water quality and treatment conditions throughout the system. This correspondence must be submitted to the Department prior to commencement of such monitoring.

(h) The water supplier shall report to the Department the results of any test, measurement or analysis required by these rules that is performed on site (e.g. supplemental fluoride) by trained personnel within 10 days after the end of the month, except that reports which indicate that fluoride levels exceed 4.0 mg/l shall be reported within 48 hours:

(i) The water supplier shall submit to the Department within 10 days after completing any public notification action as prescribed in OAR 333-061-0042 a representative copy of each type of notice distributed to the water users or made available to the public and the media along with certification that the system has fully complied with the distribution and public notification requirements.

(j) Water systems required to sample quarterly or more frequently must report to the Department within 10 days after the end of each quarter in which samples were collected. Water systems required to sample less frequently than quarterly must report to the Department within 10 days after the end of each monitoring period in which samples were collected.

(A) Disinfection byproducts. Water systems must report the information specified in **Table 25** as follows: [Table not included. See ED. NOTE.]

(B) Disinfectants. Water systems must report the information specified in **Table 26** as follows: [Table not included. See ED. NOTE.]

(C) Disinfection byproduct precursors and enhanced coagulation or enhanced softening. Water systems must report the information specified in **Table 27** as follows: [Table not included. See ED. NOTE.]

(k) Systems using surface water or GWUDI sources must report to the Department or local county health department within 45 days of receiving a sanitary survey report or comprehensive performance evaluation report. Failure to report to the Department requires a Tier 2 public notice as prescribed in OAR 333-061-0042(2)(b)(D).

(2) Record Maintenance by Water Suppliers:

(a) Water suppliers of public water systems shall retain records relating to the quality of the water produced and the condition of the physical components of the system. These records shall be kept at a convenient location within or near the area served by the water system;

(b) Records of bacteriological analyses shall be kept for at least 5 years and records of chemical analyses, secondary contaminants, turbidity and radioactive substances shall be kept for at least 10 years. Data may be transferred to tabular summaries provided the following information is included:

(A) Date, place and time of sampling, and the name of the person who collected the sample;

(B) Identification of the sample as to whether it was a routine finished water sample, repeat sample, raw water sample or special purpose sample;

(C) Date and time of the analysis, the laboratory and person performing the analysis; and,

(D) Analytical method used and results of the analysis.

(c) Records of actions taken to correct items of non-compliance shall be kept for at least 3 years after the last action taken with respect to the particular violation;

(d) Reports, summaries or communications on sanitary surveys shall be kept for at least 10 years;

(e) Records concerning variances or permits shall be kept for at least 5 years after the expiration of the variance or permit;

(f) Records of residual disinfectant measurements shall be kept for at least 2 years.

(g) All public water systems subject to the requirements of subsection (1)(f) of this rule shall retain the original records of all sampling data and analyses, reports, surveys, letters, evaluations, schedules, Department determinations, and any other information required for no fewer than 12 years.

(h) Copies of public notices issued pursuant to OAR 333-061-0042 and certifications made to the Department must be kept for three years after issuance.

(i) Water systems using surface water or groundwater under the direct influence of surface water that uses conventional filtration treatment or direct filtration treatment and that recycles spent filter backwash water, thickener, supernatant, or liquids from dewatering processes must collect and retain on file recycle flow information specified in paragraphs (i)(A) through (F) of this rule for review and evaluation by the Department beginning June 8, 2004:

(A) Copy of the recycle notification and information submitted to the Department as required by OAR 333-061-

0032(10)(b);

(B) List of all recycle flows and the frequency with which they are returned;

(C) Average and maximum backwash flow rate through the filters and the average and maximum duration of the filter backwash process in minutes;

(D) Typical filter run length and a written summary of how filter run length is determined;

(E) The type of treatment provided for the recycle flow;

(F) Data on the physical dimensions of the equalization and/or treatment units, typical and maximum hydraulic loading rates, type of treatment chemicals used and average dose and frequency of use, and frequency at which solids are removed, if applicable.

(j) For systems required to compile a disinfection profile, the results of the profile (including raw data and analysis) must be kept indefinitely as well as the disinfection benchmark (including raw data and analysis) determined from the profile.

(3) Records Kept by the Department.

(a) Records of turbidity measurements must be kept for not less than one year. The information retained must be set forth in a form which makes possible comparison with the limits specified by OAR 333-061-0030, 0032, and 0036.

(b) Records of disinfectant residual measurements and other parameters necessary to document disinfection effectiveness in accordance with OAR 333-061-0032(3) or (4), 0036(4)(a)(C) through (F), or 0036(4)(b) (B) through (C) of these rules must be kept for not less than one year. Records of decisions made on a system-by-system and case-by-case basis must be made in writing and kept by the Department.

(c) Any decisions made in accordance with consultations made with the Department concerning modifications to disinfection practices including the status of the consultation.

(d) Records of decisions that a water system using alternative filtration technologies, as determined by OAR 333-061-0030(3)(b)(D), can consistently achieve a 99.9 percent removal and/or inactivation of Giardia lamblia cysts, 99.99 percent removal and/or inactivation of viruses, and 99 percent removal of Cryptosporidium oocysts. The decisions must include enforceable turbidity limits for each water system by the Department. A copy of the decision must be kept until the decision is reversed or revised. The Department must provide a copy of the decision to the water system.

(e) Records of water systems required to do a filter self-assessment, required to conduct a comprehensive performance evaluation as required by section (1)(d) of this rule, or required to participate in the Composite Correction Program.

(f) Records of the Department's determinations, including all supporting information and an explanation of the technical basis for the control of disinfectants and disinfection byproducts. These records must also include interim measures toward installation.

(A) Records of water systems that are installing GAC or membrane technology in accordance with OAR 333-061-

0030(2)(b)(D). These records must include the date by which the water system is required to have completed installation.

(B) Records of water systems required to meet alternative minimum TOC removal requirements or for whom the Department has determined that the source water is not amenable to enhanced coagulation in accordance with OAR 333-061-0032(9) (e)(C) and (D), respectively. These records must include the alternative limits and rationale for establishing the alternative limits.

(C) Records of water systems using surface water or groundwater under the direct influence of surface water using conventional treatment meeting any of the alternative compliance criteria specified in OAR 333-061-0032(9)(d)(A).

(g) Monitoring plans for water systems using surface water or groundwater under the direct influence of surface water serving more than 3,300 persons in accordance with OAR 333-061-0036(3)(b)(K).

(h) Records of decisions made on a water system-by-water system and case-by-case basis under provisions of these rules must be made in writing and kept by the Department.

(A) Records of decisions made under this paragraph shall be kept for 40 years (or until one year after the decision is reversed or revised) and a copy of the decision must be provided to the water system:

(i) Any decisions made to approve alternate recycle locations, require modifications to recycle return locations, or require modifications to recycle practices.

[ED. NOTE: Tables referenced are available from the agency.]

Stat. Auth.: ORS 448.131 &448
Stats. Implemented: ORS 431.110, 431.150, 448.175 & 448.273
Hist.: HD 17-1981(Temp), f. & ef. 8-28-81; HD 4-1982, f. & ef. 2-26-82; HD 2-1983, f. & ef. 2-23-83; HD 21-1983, f. 10-20-83, ef. 11-1-83; HD 11-1985, f. & ef. 7-2-85; HD 30-1985, f. & ef. 12-4-85; HD 3-1987, f. & ef. 2-17-87; HD 3-1988(Temp), f. & cert. ef. 2-12-88; HD 17-1988, f. & cert. ef. 7-27-88; HD 9-1989, f. & cert. ef. 11-13-89; HD 26-1990, f. 12-26-90, cert. ef. 12-29-90; HD 12-1992, f. & cert. ef. 12-7-92; HD 3-1994, f. & cert. ef. 1-14-94; HD 1-1996, f. 1-2-96, cert. ef. 1-5-96; OHD 7-2000, f. 7-11-00, cert. ef. 7-15-00; OHD 23-2001, f. & cert. ef. 10-31-01; OHD 17-2002, f. & cert. ef. 10-25-02; PH 12-2003, f. & cert. ef. 8-15-03; PH 33-2004, f. & cert. ef. 10-21-04

APPENDIX C

APPENDIX C
INDEX OF ABBREVIATIONS

AC	Asbestos Concrete
ACWD	Arch Cape Water District
DWCCL	Drinking Water Contaminant Candidate List
CDBG	Community Development Block Grant
cfs	Cubic Feet per Second
CIP	Clean in Place
CT	Disinfectant Concentration-Time Product
DBP	Disinfection Byproduct
DEQ	Oregon Department of Environmental Quality
EDU	Equivalent Dwelling Unit
EPA	Environmental Protection Agency
GO	General Obligation
gpd	Gallons per Day
gpm	Gallons Per Minute
HAA5	Haloacetic Acids (Five)
IOC	Inorganic Chemicals
ISO	Insurance Services Organization
MAO	Mutual Agreement and Order
MCL	Maximum Contaminant Level
NTU	Nephelometric Turbidity Units
O.D.	Outside Diameter
OAR	Oregon Administrative Rules
ODHS	Oregon Department of Human Services
OECDD	Oregon Economic and Community Development Department
OWRD	Oregon Department of Water Resources
psi	Pounds per Square Inch
PVC	Polyvinyl Chloride
RD	Rural Development (US Department of Agriculture)
RMV	Real Market Value
RUS	Rural Utilities Service
SDAO	Special Districts Association of Oregon
SDC	Systems Development Charges
SDWRLF	Safe Drinking Water Revolving Loan Fund
SOC	Synthetic Organic Carbon
SPWF	Special Public Works Fund
SWTR	Surface Water Treatment Rule
TTHM	Total Trihalomethanes
VOC	Volatile Organic Carbons

City of Estacada
WATER MANAGEMENT & CONSERVATION PLAN
January 2008

EXECUTIVE SUMMARY

This Water Management and Conservation Plan (WMCP) was prepared for the City of Estacada in accordance with the recommendation of the Oregon Water Resources Department. The City currently operates a public community water system that supplies drinking water to approximately people 2,700 residents.

Although the City is not mandated to prepare this plan, by submission of this WMCP and a check for $1,000, the requirements of Oregon Administrative Rules (OAR) Chapter 690, Division 86 are satisfied. OAR 690-086 was re-revised by the Water Resources Commission in November 2002. The WMCP also presents water conservation measures that the city plans to initiate, as well as continue current conservation measures.

The WMCP is organized into the following sections, each of which addresses specific sections required under OAR 690-086:

Section	***OAR Requirement***
Section I - Introduction	690-086-125
Section II - Water Supplier Description	690-086-140
Section III - Water Conservation	690-086-150
Section IV - Curtailment	690-086-160
Section V - Water Supply	690-086-170

Description of Municipal Water Supply

The City of Estacada operates a public community water system (OHD Public Water System Identification No. 4100279), supplying water to approximately 2,695 people in 2007. The city currently has 2 consumptive water rights for the Clackamas River. Each right is for 2.0 cfs (1.29 mgd) for a total of 4.0 cfs (2.58 mgd). Water is pumped from the intake structure located immediately adjacent to the treatment plant along the Clackamas River and filtered prior to chlorination and storage. Finished water is pumped into one of three reservoirs for distribution.

Water Conservation Element

The city currently does not have an approved WMCP. However in recent years the city has implemented several conservation measures:

1. *System Wide Metering*. The city serves more than 890 customers including residential and commercial/industrial. There are no known unmetered customers within the water system, and

all new connections are metered.

2. *Water Rate Structure*. The city has a uniform single-block rate structure that is based on the quantity of water metered, and will continue to use this rate structure.

3. *Annual Water Audits*. Each year the city tracks annual average, peak day, and per capita water use, as well as total consumption and production including unaccounted water. The city will continue to track these data to help identify and correct sources of unaccounted water.

4. *Leak Detection and Repair*. The city currently does not have a system wide leak detection program in place. However, the city responds immediately to reports of leaks and takes immediate action to repair such leaks.

5. *Prevention of Reservoir Overflows*. The plant's SCADA system was recently upgraded, and includes monitoring and recording of reservoir levels. Overflow occurrences are logged, and the operator immediately alerted.

6. *Pipe Replacements*. In recent years the city has replaced more than 2,000 feet of old 8" ductile iron pipe with 12" PVC pipe, and installed more than 11,000 feet of new 12" PVC pipe. The city will continue to upgrade older pipe.

Summary of Ongoing and Proposed new Conservation Programs

The city plans to implement, either as a new or continuing program, the following measures:

1. Water Audits. Continue to perform annual water audits, including data recording of annual average, peak daily use, per capita use, and unaccounted water.

2. Leak Detection. Perform annual leak detections of approximately 10 percent of the distribution system such that the entire system is evaluated over a 10-year cycle.

3. Master Meter Calibration. Continue to periodically calibrate the master meter at the treatment plant, minimum every 5 years.

4. Meter Installations and Replacements. Continue to install new meters for all new system connections. Implement a program to routinely test and replace older 2-inch meters. Adopt a program to rebuild and replace residential meters at periodic intervals.

5. Public Information. Implement new programs to provide information on water conservation for the public, such as seasonal newsletters or flyers and workshops.

6. Rates. Continue to use the current uniform rate structure which ties the amount of water billed to the amount of water used.

5-Year Benchmarks

The primary goal for setting the 5-year benchmarks is in conservation and the reduction in accounted water throughout the system. The average unaccounted water in 2006 was 26%, while the average unaccounted water from 2000 through 2005 was 26%. OAR 690-086-150 (4) recommends an annual system leakage goal of 10 percent or less.

The city plans to implement the following measures to reduce system leakage and unaccounted water:

- Implement a system-wide leak detection and repair program that includes performing leak detections of all system pipelines on a 10-year cycle.

- Improve the accuracy of the city's annual water audits by routinely calibrating the master meter at the treatment plant, as well as testing and maintaining all 2-inch and larger meters in the system. Repair and replace as necessary all residential meters on a 10-year cycle.

- Continue to track water production and consumption on a monthly basis.

Water Curtailment Program

The proposed curtailment program under this WMCP is comprised of four stages, each with a set of triggers. The four stages, in order of increasing severity, described below:

Stage	Initiating Conditions	Actions
1. Water Alert	General recognition of drought conditions typical in Western Oregon, or Demand reaches 80 percent of supply capacity for 3 consecutive days, or	Public notice and voluntary water use reductions
2. Serious Shortage	Demand reaches 90 percent of supply capacity for 3 consecutive days	Compulsory restrictions on water use
3. Critical Shortage	Demand reaches 100 percent of supply capacity for 3 consecutive days	Prohibitions on water use
4. Emergency	System failure - main break, treatment plant interruption, natural disaster	Immediate notification of customers of system failure; implementation of Stage 2 or Stage 3 measures if emergency will result in a supply shortage

Water Supply Element

A per capita method was used to determine demand projections for the city. Assumptions under this method include:

- per capita use will be reduced from 2006 due to a major leak repair to the system, and will remain unchanged in future years

- The percentage of commercial/industrial usage will remain unchanged from previous years.

Based on the available data, the following values were used to project future demands:

Average Annual Demand (AAD)	230 gpcd
Peak Month Demand (MMD)	315 gpcd
Peak Day Demand (MDD)	400 gpcd
Peaking Factor (MDD/AAD)	1.74

Using these criteria and a projected annual growth rate of 3 percent, system demands at the end of the 20-year (2027) planning period are projected to be 1.12 mgd for average day demands and 1.94 mgd for peak day demand.

The city obtains its water exclusively from the Clackamas River under two separate water rights permits (23610 and 35357) and certificates (26471 and 50566). Both rights are for 2.0 cfs for a total of 4.0 cfs (2.58 mgd) rights.

Under these criteria the projected peak day demands will exceed the city's allotted 4.0 cfs in the year 2037 (30 years). Long term peak day demands are estimated to be 3.8 mgd in the year 2050. Although beyond the scope of this report and beyond the 20 year planning window, the city is beginning to explore alternative long-term options of water.

List of Affected Local Governments

This WMCP may affect the following local governmental agencies:

- Cities of Lake Oswego, Gladstone, and Milwaukie
- South Fork Water District
- Clackamas River Water
- North Clackamas County Water Commission (Sunrise Water Authority & Oak Lodge WD)

Thirty days prior to submitting this plan to OWRD, each affected governmental agency should be invited to review this plan and provide comments relating to its consistency with their comprehensive land use plans.

Plan Update Schedule

The city anticipates submitting an update of this plan in 10 years. As required by OAR Chapter 690, Division 86, a progress report will be submitted in five years.

I. INTRODUCTION

This section addresses the requirements of Oregon Administrative Rules (OAR) 690-086-0125.

A. Overview

The City of Estacada's water supply comes from a single source: the Clackamas River. The City currently holds two consumptive water rights on the river. Both points of diversion are located immediately adjacent to the water treatment facility, and shown in Figure 1-1.

Water is diverted from the Clackamas River and pumped directly into the City's treatment plant for filtration and chlorination prior to final storage and distribution.

In 2006 Estacada had a service population of approximately 2,580 people served through approximately 892 service connections. This includes both residential and industrial service connections.

B. Plan Organization

This Water Management and Conservation Plan (WMCP) fulfills the requirements of the Oregon Administrative Rules adopted by the Water Resources Commission in November 2002 (OAR Chapter 690, Division 086). It describes water conservation and curtailment programs to guide planning and operation of the city's water system.

The WMCP is organized into the following sections, each addressing specific sections of OAR Chapter 690, Division 086:

Section	OAR Requirement
Section 1 - Introduction	OAR 690-086-0125
Section 2 - Water Supplier Description	OAR 690-086-0140
Section 3 - Water Conservation	OAR 690-086-0150
Section 4 - Curtailment	OAR 690-086-0160
Section 5 - Water Supply	OAR 690-086-0170

C. Affected Local Government

In addition to the City of Estacada, the WMCP may affect local water purveyors of Clackamas River water. The WMCP should be made available for review by all governing agencies relating to consistency with their local government's comprehensive land use plans.

D. Plan Update Schedule

The City of Estacada anticipates submitting an update of this plan within 10 years of plan approval. As required by the Commission's rules, a progress report will be submitted within five years from the approval date of this plan.

E. Time Extension

No additional time to implement metering or previously established benchmarks is required or requested under this plan.

II. WATER SUPPLIER DESCRIPTION

This section satisfies the requirements of OAR 690-086-0140.

A. Source - OAR 690-086-0140 (1)

The City of Estacada's water supply currently comes from a single source; the Clackamas River. The city holds two consumptive water rights on the Clackamas River with both having a point of diversion at the location of the water treatment plant. Each water right is for 2.0 cubic feet per second (cfs), for a total of 4.0 cfs.

The point of diversion consists of a water intake platform with intake pumps that carry raw water to the treatment plant. Raw water is filtered prior to chlorination and storage for final distribution into the system.

The city has no intergovernmental agreements regarding water supply.

B. Interconnection(s) with Other Systems - OAR 690-086-0140 (7)

The City of Estacada's water system does not have any interconnections with other water systems. However, in 2004 the City entered into discussions with an association of the water providers from the Clackamas River to provide for inter agency support. Collectively referred to as the Water Providers, parties to the agreement included the Cities of Estacada, Lake Oswego, Milwaukie and Gladstone, as well as Clackamas River Water, South Fork Water and the North Clackamas Water Commission (Oak Lodge Water District and Sunrise Water Authority). The purpose of the agreement was to provide regional coordination and planning to more efficiently utilize the Clackamas River resources.

C. Service Area Description - OAR 690-086-0140 (2)

Figure 2-1 shows the extent of the City of Estacada water distribution system. As of 2007, the city's water system served a population of approximately 2,695 based on the information available from the Population Research Center at Portland State University. Service population estimates from 2000 through 2007 are shown in Table 2-1.

Table 2.1. Service Population Estimates
City of Estacada for 2002-2007

Year	Service Population
2000	2,371
2001	2,400
2002	2,440
2003	2,440
2004	2,450
2005	2,480
2006	2,580
2007	**2,695**

D. Records of Water Use - OAR 690-086-0140 (4) and (9)

1. Production (Demands)

Water production is equal to the volume of treated water that is delivered into the distribution system. System demand is equal to all water used within the system, including metered consumption (residential and industrial/commercial), public use (fire fighting and hydrant flushing), and water losses.

The Average Day Demand (ADD) is defined as the total annual water production divided by 365 days. The Maximum Day Demand (MDD) is defined as the greatest one-day system demand on any given day of the year. The Maximum Month Demand (MMD) is defined as the greatest monthly system demand that occurs in any one month of the year. The Peak Day Peaking Factor (PDPF) is defined as the MDD divided by the ADD.

Both the ADD and MDD have shown a steady increase through 2006. MDD values have ranged from 0.952 mgd in 2002 to 1.131 mgd in 2004. The PDPF has held relatively steady near 1.80, with a maximum of 1.87 in 2003 and minimum of 1.70 in 2005. The MDD is anticipated to decrease in 2007 and beyond with the anticipated disconnect of a single large industrial service connection.

Demands for the Estacada water system for 2000 through 2006 are summarized in Table 2.2. Figure 2.2 graphically shows the ADD and MDD for the years 2000 through 2006.

Table 2.2 City of Estacada
Water System Demand Summary

YEAR	POP	AVERAGE DAY DEMAND		MAX MONTH DEMAND		PEAK DAY DEMAND		
		MGD	GPC/D	MGD	GPC/D	MGD	GPC/D	PF
2000	2,371	0.593	250	25.67	349	1.067	450	1.80
2001	2,400	0.563	235	21.84	294	1.013	422	1.80
2002	2,440	0.529	217	20.02	265	0.952	390	1.80
2003	2,440	0.587	241	25.53	338	1.097	450	1.87
2004	2,450	0.619	253	25.65	338	1.131	462	1.83
2005	2,480	0.654	264	27.07	352	1.115	450	1.70
2006	2,580	0.601	233	25.56	320	1.057	410	1.76

2. Consumption and Unaccounted Water

Consumption is equal to the total metered water use within a water system, including metered service connections and hydrants. Currently there are no unmetered connections in the Estacada water system.

Water loss is equal to the difference between production and consumption divided by production. Water loss from the system can be the result of many factors, such as inaccurate meter readings, backwashing of the treatment system, unlawful tapping of city hydrants or system leakage.

The city has indicated annual losses as great as 32 percent (2001) and monthly losses as great as 42 percent (October 2001). The unaccounted water rate goal recommended by OWRD is 10 percent.

One source of such high system losses was identified as a leak to a large industrial service connection that was detected in late 2003 and repaired in early 2006. The city has also identified unlawful tapping of certain hydrants as a source of system losses. Additionally, backwashing of the filters at the treatment plant is done with treated water after the final meter. Thus, backwashing of the filters translates into water that is not counted in the system.

The city will continue to implement existing programs, as well as explore new programs, to minimize unaccounted water as explained in Section III.

E. Customer Characteristics and Use Patterns - OAR 690-086-0140 (6)

Table 2.3 presents an overview of the customers served in 2006, including the type of customer and number of connections per customer type. The City does not keep specific usage quantities for each customer type.

Table 2.3 Customer Description for 2006

Type of Customer	Number of Connections	Percent of Connections
Residential	678	82.4%
Small Commercial/ Industrial (3/4-inch meter)	94	11.4%
Large Commercial/ Industrial (>3/4-inch meter)	51	6.2%
Total	823	100%

The overwhelming majority of water connections is by the residential sector, at over 82 percent. Small commercial/industrial customers make up over 11 percent of the metered customers while larger commercial/industrial customers make up just over 6 percent.

F. City Water Rights - OAR 690-086-140 (5)

The City of Estacada collects raw water from the Clackamas River. The City owns two separate consumptive water rights for the river, each for 2.0 cfs (or 1.29 MGD) for a total of 2.58 MGD. Water is pumped from a single platform located along the bank of the Clackamas River at the Treatment Plant site. Information regarding these water rights are shown in Table 2.4.

Based on OWRD's web-based water rights database, there are numerous water rights for the Clackamas River, both junior and senior to the two rights that Estacada has, including but not limited to domestic, irrigation, ponding, and municipal uses. One of the city's two rights (Certificate 26471, 1955) is senior to several Oregon Department of Fish and Wildlife (ODFW) rights for fish propagation in tributary streams (for example Eagle Creek, 125 cfs, Certificate 59496, Priority Date 1966; Fish Creek, 60 cfs, Certificate 59498, Priority Date 1966; Roaring River, 100 cfs, Certificate 59506, Priority Date 1966), while the city's second right (Certificate 50566, 1973) is junior to these ODFW rights.

ODFW maintains a right for the Clackamas River (Certificate 59490, Priority Date 1966) for 400 cfs for propagation of aquatic life which is junior to the city's 1955 right for 2.0 cfs, and senior to the city's 1973 right of 2.0 cfs.

Table 2.4 Water Rights Permits, City of Estacada

Source	Application/ Permit No.	Priority Date	Capacity		Type of Use	Max Rate of Withdrawal to Date[1]		2006 Average Monthly Withdrawal (MG)	5-Year Average Monthly Withdrawal (MG)	Authorized Date for Completion
			(cfs)	(mgd)		Peak Day (mgd)	Annually (MG)			
Clackamas River	App: S-29972 Permit: S-23610 Cert: 26471	May 10, 1955	2.0	1.29	Municipal	1.131	238.75 (2005)	18.27	18.19	N/A
Clackamas River	App: S-49991 Permit: S-37375 Cert: 50566	January 19, 1973	2.0	1.29	Municipal					N/A
Total Permitted Source Capacity			4.0	2.58						

Notes.

1. Maximum rate of withdrawal is based on data from 1999 through 2006.

G. System Description - 690-086-140 (8)

A schematic of the source, treatment, and distribution facilities for the City of Estacada water system is shown in Figure 2.3. The intake structure, located on the Clackamas River immediately adjacent to the treatment plant along Highway 211/224, consists of two vertical turbine pumps with fish screens on the intakes and water quality monitoring equipment. Water is pumped into the treatment facility for filtration and chlorination. Finished water is pumped into the distribution system, including three storage reservoirs (total storage capacity of 1.4-MG). The water treatment plant has a nominal treatment capacity of 2.0 mgd.

The city is divided into three distinct pressure zones. Reservoirs No.1 and No.2 serve the low pressure zone exclusively, up to elevation 615'. Reservoir No. 3 primarily feeds the high pressure zone, elevations 710' to 820'. An intermediate pressure zone was created with the installation of pressure reducing valves that protect connections between 615' to 710'.

Table 2.5 presents information for the city's storage and distribution system.

Table 2.5 Water System Inventories

System Pipe Inventory (lengths approximate)				
Pipe Diameter	**Steel**	**AC**	**DI**	**PVC**
2	1,700	0	0	0
4		2,050	575	475
5/6	11,700	14,620	615	3,580
8	1,560	13,995	1,365	990
10	0	9,580	0	0
12	0	4,030	0	13,475
System Reservoir Inventory				
Name	**Volume (gallons)**		**Overflow Elevation (feet)**	**Material**
Reservoir No. 1	400,000		705	Concrete
Reservoir No. 2	500,000		705	Steel
Reservoir No.3	500,000		910	Steel

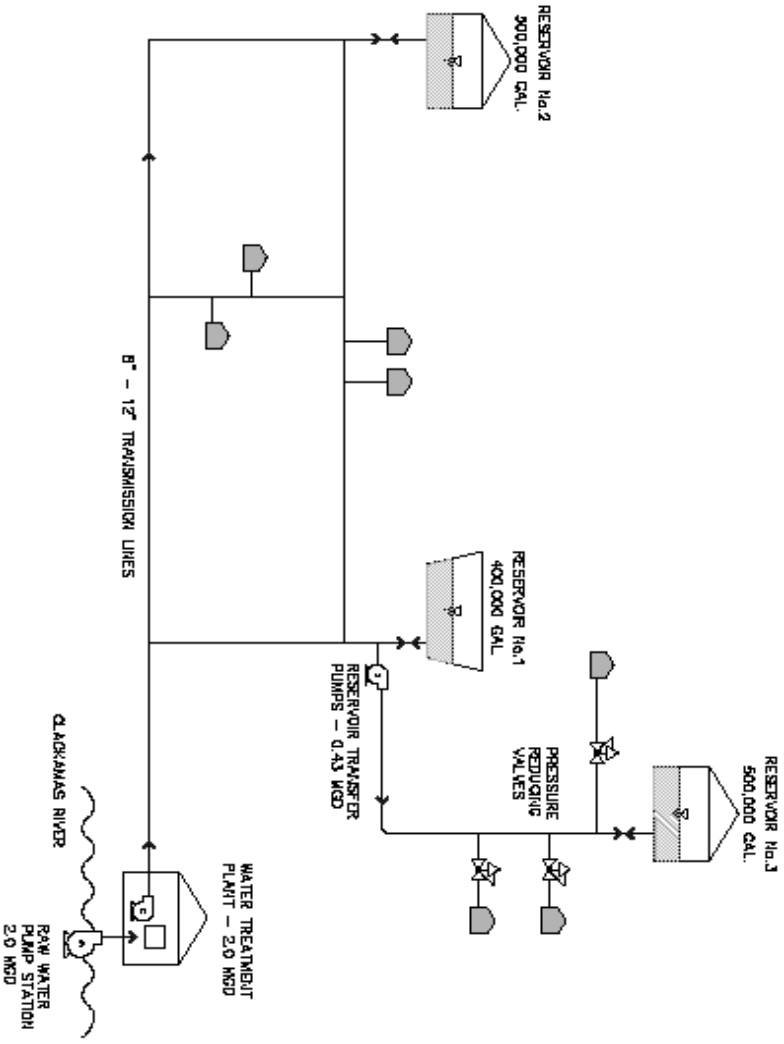

Figure 2.3 Water Supply System Schematic

III. WATER CONSERVATION

This section satisfies the requirements of OAR 690-086-150.

A. Current Conservation Measures - OAR 690-086-150 (1) and (3)

The city does not have a previously approved Water Management and Conservation Plan. However, the city has implemented a number of water conservation measures in recent years:

1. Reservoir Overflow Prevention. A SCADA system is in place to monitor the reservoir levels during filling. The system records all overflow occurrences and durations, and alerts the system operator of the situation.

2. System-Wide Metering. The City of Estacada has more than 890 connections served by the water system. There are no unmetered connections on the system, and all new connections are installed with a meter.

3. Pipe Replacements. The City exercises a pipe replacement program to replace older leak-prone pipe throughout the system with new pipe. While large leaks may not be accounted for in leaking pipes, pipe replacement helps ensure that large-scale failure of older pipe in the system does not occur.

4. Meter testing and Replacement. The city tests and repairs or replaces water meters when there is customer concern. Meters are repaired as applicable, or replaced as needed.

B. Use and Reporting - OAR 690-086-150 (2)

The city has a water use measurement and reporting program that complies with the measurement standards of OAR Chapter 690, Division 86.

C. Required Conservation Programs - OAR 690-086-150 (4)

OAR 690-086-150 (4) requires that all municipal water suppliers establish five-year benchmarks for implementation of each of the following required conservation measures:

- Annual water audit
- System-Wide metering program
- Meter testing and maintenance program
- Unit-based billing program
- Regular leak detection and repair (if leakage greater than 10%)
- Public education

The city has ongoing programs to implement many of the measures listed, as described in the preceding section. Specifically, the city conducts ongoing pipe replacements to the distribution system, installs new meters on all new connections, repairs and/or replaces faltering meters, and uses a unit-based rate structure. Additionally, the system is fully metered.

Five-Year Benchmarks for Required Conservation Measures

Over the next 5 years the city intends to continue the programs described above and to expand measures related to annual water audits, meter testing and maintenance, leak detection and repair, and public education. A description of the city's plans to implement these measures are discussed below.

1. System Metering. All service connections to the City of Estacada water system are metered. The City will continue to require metering of all new service connections.

2. Water Rate Structure. The city will continue to use its current billing rate structure that bases customer bills, in part, on the amount of water they use.

3. Annual Water Audits. The city plans to continue conducting annual water audits to measure unaccounted water throughout the system and estimate leakage rates in order to identify and minimize system losses.

4. Meter Testing and Maintenance. The city plans to continue their program of routine testing and maintenance of production and service meters throughout the water system.

5. Leak Detection and Repair. Since the amount of unaccounted water exceeds 10 percent, the city is required to implement a leak detection program. The program will include specific monitoring of old pipes (greater than 20 years old) and random monitoring of the remaining system. The ultimate goal is to survey and monitor 10 percent of the system each year for leaks, such that the entire system undergo complete monitoring every 10 years. The city will also continue to maintain current and accurate records of consumption and production, leak detections and pipe repairs.

6. The city plans to increase public awareness on water conservation issues by implementing a number of public outreach programs, including leaflets sent with utility bills and participation in local workshops.

D. Expanded Use Under Extended Permits - OAR 690-086-150 (5) and (6)

The City of Estacada does not intend to expand or initiate diversion of water under an extended permit for which resources have been identified.

IV. CURTAILMENT

This section fulfills the requirements of OAR 690-086-160.

Curtailment planning is the development of proactive measures to reduce demand during supply shortages due to prolonged drought, or system failure from unanticipated catastrophic events such as flooding, earthquake, or contamination.

The goal of this curtailment plan is to have objective criteria that trigger actions that will ensure sufficient water to meet the water demands of the water supply system, without jeopardizing the health, safety, or welfare of the community.

This document outlines four stages of alert for potential shortage or water service difficulties: Stage 1 is a mild shortage alert; Stage 2 is a serious shortage alert; Stage 3 is a critical shortage alert, and; Stage 4 is an emergency water alert.

A. Historical Supply Deficiencies - OAR 690-086-160 (1)

The City of Estacada has not had any major supply deficiencies within the last 10 years that have caused customers to limit water use or seek alternative sources of water .

B. Curtailment Stages - OAR 690-086-160 (2), (3) and (4)

The Curtailment Plan presented in this document consists of four stages increasing in severity:

- Stage 1 - Water Shortage Alert
- Stage 2 - Serious Water Shortage
- Stage 3 - Critical Water Shortage
- Stage 4 - Emergency Water Shortage

Criteria outlined in Table 4.1 will trigger the different curtailment stages.

Table 4.1 Curtailment Stages

Stage	Initiating Conditions	Actions
1. Water Alert	General recognition of drought conditions typical in Western Oregon, or Demand reaches 80 percent of supply capacity for 3 consecutive days, or	Public notice and voluntary water use reductions
2. Serious Shortage	Demand reaches 90 percent of supply capacity for 3 consecutive days	Compulsory restrictions on water use
3. Critical Shortage	Demand reaches 100 percent of supply capacity for 3 consecutive days	Prohibitions on water use
4. Emergency	System failure - main break, treatment plant interruption, natural disaster	Immediate notification of customers for contamination; implementation of Stage 2 or Stage 3 measures if emergency will result in a supply shortage

Stage 1: Water Alert

Stage 1: Water Alert status will activate a program to inform customers of the potential for drought and water shortages, and reasons to voluntarily conserve water. Stage 1 will be activated by the city manager and will be triggered when any of the following conditions exist:

- Demand reaches 80 percent of water supply capacity as determined by the city manager for a period of 3 consecutive days.
- General drought conditions are recognized in Clackamas County

Under Stage 1, the city will issue a notice requesting customers to voluntarily reduce water use. The notice will include a description of the water conditions, reasons for the requested conservation measures, and a warning that mandatory restrictions on water usage may be imposed if voluntary measures are not effective in achieving water use reduction goals. Voluntary measures will include, but are not limited to:

- Minimizing landscape watering between 10:00 am and 6:00 pm
- Water landscapes on alternate days
- Minimize large consumptive uses, such as filling swimming pools

The notice will also direct customers to sources of information for water usage and conservation tips. If the alert condition is regional and the media are already alerting users of potential water shortages, the city may rely on these alerts to act as Stage 1 alerting.

Stage 2: Serious Water Shortage

Stage 2 is similar to Stage 1 except that voluntary measures regarding outdoor water use will become compulsory, and all non-essential water use will become prohibited. Stage 2 will be initiated by the city manager when demand on the water system reaches 90 percent of supply capacity for a 3-day consecutive period.

Under Stage 2, customers will be notified of the following water restirctions:

- Landscape watering to be done only between 6:00 pm and 10:00 am
- Landscape watering only on allotted day (as defined by the city manager)
- Washing of private vehicles prohibited except at commercial washing facilities that practice wash water recycling (Exceptions include vehicles that must be kept clean to maintain public health and welfare such as food carriers and solid waste transfer vehicles)
- No water for washing sidewalks, walkways, driveways, courts, parking lots, and other hard-surface areas
- No water for washing buildings, gutters, or structures except as needed for construction
- No water for fountains or ponds for aesthetic or scenic purposes except to support aquatic life
- Water only tees and greens and not other golf course areas
- No water for dust control except as required for construction

Stage 3: Critical Water Shortage

Stage 3 will be initiated when the demand on the water system is 100 percent of available supply capacity for a consecutive 3-day period. Stage 3 measures will include:

- Perform actions for Stage 1
- Perform actions for Stage 2
- Replace restriction of watering on allotted days from Stage 2 with a prohibition on all outdoor watering, with exceptions for new lawn, sod farms, grass or turf planted after March 1st of calendar year in which the restrictions are imposed, golf greens, or park and recreation areas specifically designated by the city council.
- No water to fill, refill, or add to any indoor or outdoor swimming pool or hot tub unless one of the following conditions is met; the pool is used for a neighborhood fire control supply, the pool has a recycling water system, the pool has an evaporative cover, or the pool's use is required by a medical doctor's prescription.
- No water from hydrants for construction purposes (except on a case-by-case basis), fire drills, or any purpose other than fire fighting
- Implement commercial restrictions on water use, as dictated by the city manager
- Issue additional public announcements to alert customers of the severity of the situation

Stage 4: Emergency Water Shortage

Stage 4 will be initiated when failure of a system component or non-drought emergency conditions result in an immediate shortage of water. Examples include failure of a water main, failure of critical equipment at the treatment plant, contamination of the source water, or other natural or malevolent disaster that disables the effectiveness of the treatment plant.

If the emergency is expected to result in water shortages as described in Stage 2 or 3, the city will implement the curtailment measures of Stage 2 or 3 as appropriate.

If the emergency is expected to result in water that is unsafe for public consumption, the city manager will direct staff to issue a boil water order and notify the customers as quickly as possible. This will include at a minimum emergency media notification to assist in notifying customers. In addition the city manager will implement the following:

- Contact the Oregon Drinking Water Program, Department of Human Services and request their assistance in responding to the situation
- Contact the Oregon State Police and Clackamas County Sheriff to obtain help in notifying customers

The city will continue to investigate and develop backup plans for a Stage 4 emergency. These plans may include purchasing and transporting water from neighboring communities, sending customers to a pre-designated water distribution location, and/or supplying bottled water.

V. WATER SUPPLY

This section satisfies the requirements of OAR 690-086-170.

A. Delineation of Service Areas - OAR 690-086-170 (1)

In 2006 the City of Estacada's water supply system served a population of approximately 2,580. There are three distinct pressure zones which are delineated according to elevation; low pressure zone; intermediate pressure zone, and; high pressure zone. Elevations for the three zones are described in Section II-G above. The overall service area, as well as the three distinct service zones, are outlined in Figure 5.1.

The City of Estacada has observed a dramatic increase in the development of residential home sites in the past few years. Currently the City has over 1,500 residential lots in the planning or construction stages throughout the area. Although the City has yet to see a substantial number of building permit requests, the infrastructure is in place to support a substantial population increase.

Based on potential of a substantial increase in lot sales, and the proximity to the Portland Metropolitan Urban Growth Boundary, a higher than historical growth rate is warranted. In 2006, the Estacada City Council adopted a projected growth rate of 3% per year for the City's planning documents. A 3% growth rate has been incorporated into the projections in this update. Population projections for the next 20 years are shown in Table 5.2.

B. Water Supply Demand Estimates and Comparison of Projected Needs to Available Sources - OAR-690-086-170 (2), (3) and (4)

Water source and treatment projections are based on the ability to meet the peak day demands. Distribution and storage system design criteria are based on the ability to meet fire flow demands superimposed on peak day demands to account for the worst case scenario.

Demands are assumed to include all commercial and industrial water use. In order to maintain an accurate correlation, the figures used for projecting demands assume that the proportion of commercial/industrial demands maintains its relative proportion to total water demands.

In 2006 the City had an annual average demand of 601,000 gallons per day. The monthly average summer demand was 676,500 gallons per day and the peak monthly summer demand was 838,000 gallons per day. The peak day of record was 1,161,00 gallons in July. However, the day prior to and after that peak day were significantly lower, indicating a possible anomaly in the reading, most likely in the time of day the reading was taken. Additionally, the city fire department has indicated that no significant burn events took place on that day, and the city does not have a record of any other significant usage events that day. For these reasons the peak day was considered anomalous and the next peak day demand of 1,057,000 gallons (measured in June) was taken as more representative of the peak day demand for 2006.

A summary of demands to the water system for the 2000 through 2006 is presented in Table 2.2 above.

A summary of demands to the water system for the 2000 through 2006 is presented in Table 2.2 above.

Water meter readings confirm that a significant leak in the system was repaired in late 2005. The annual average decrease in water consumption from 2005 to 2006 was 8.6%. The average decrease in summer and winter water consumption from 2005 to 2006 was 5.8% and 11.3% respectively. Given that the leak repair is a constant and immediate savings to the system, applying a direct reduction to 2006 demands will lend a more accurate representation of projected demands to the system. Conservatively applying a conservation reduction in demand to the annual data, the following per- capita design criteria are adopted for projecting future demands:

Average Annual Demand (AAD)	230 gpcd
Peak Month Demand (MMD)	315 gpcd
Peak Day Demand (MDD)	400 gpcd
Peaking Factor (MDD/AAD)	1.74

A summary of projected demands through the year 2039, the year that at the projected growth the city's existing water rights will be fully exercised, is shown in Table 5.2 below.

Table 5.2 Demand Projections and Full Usage of Water Rights

Year	Projected Population	Average Annual Demand (gpd)	Peak Month Demand (gpd)	Peak Day Demand (gpd)
2007	2,695	619,850	848,925	1,078,000
2010	2,945	677,350	927,675	1,178,000
2015	3,414	785,220	1,075,410	1,365,600
2020	3,958	910,340	1,246,770	1,583,200
2025	4,580	1,053,400	1,442,700	1,832,000
2027	4,861	1,118,030	1,531,215	1,944,400
2030	5,319	1,223,370	1,675,485	2,127,600
2037[A]	6,542	1,504,660	2,060,730	2,616,800
2050	9,606	2,209,380	3,025,890	3,842,400

Note: At 3% projected growth rate, the current water rights will be fully exercised by 2037.

A 50-year analysis was done for the city based on a continuous growth rate of 3 percent to project populations and worst case (peak day) demand. As stated above, it is assumed that the proportion of commercial/industrial demands maintain its relative proportion to total water demands. The projected population at the 50-year (year 2050) outlook was calculated to be 9.606. Per capita average annual demand, peak monthly demand, and peak daily demand for the 50-year outlook are shown in Table 5.2 above.

C. Expansion of Existing Rights - OAR 690-086-170 (5), (6) and (7)

Expansion of the two existing rights that the city holds on the Clackamas River may be available through withdrawals from Timothy Lake storage on the Clackamas River.

D. Acquisition of New Rights - OAR 690-086-170 (8)

Assuming a constant growth rate of 3 percent annually and a per capita peak day demand of 400 gpcd, the city will not be required to acquire additional water supplies within the 20 year planning window of this text.

City of Estacada

WATER SYSTEM DEVELOPMENT CHARGE METHODOLOGY & CAPITAL IMPROVEMENT PLAN UPDATE

Revised January 2010

I. OVERVIEW

The current Water System Development Charge (SDC) Methodology was adopted in Resolution 1994-5 with the enabling Ordinance 1994-9. The original methodology is based on the Capital Improvement Plan (CIP) and cost allocation factors published in the City of Estacada "System Development Charge Findings" prepared by Raymond J. Bartlett of Economic & Financial Analysis in April of 1994. The project costs and methodology have been adjusted several times since adoption.

The purpose of this document is to update the project costs and Capital Improvement Plan to current 2007 factors for the water system as well as clarify the methodology of allocating the cost to benefitted users.

The proposed CIP and methodology updates incorporate the requirements of ORS 223.297 through 223.314 by reference. The values used in this update are to be adjusted annually based on the change in the Engineering News Record 20 city average Construction Cost Index. For reference, the current January 2008 CCI is 8,090.

This SDC document was prepared in 2008, however, the City elected to postpone adoption until 2010 in response to economic concerns for the City residents. Additionally, new in 2009, as a result of a ballot initiative, municipal fees are limited to a maximum increase of 3% per year. This limitation is incorporated into this SDC update and was approved by the City Council after providing notice and holding the required public hearings in December 2009.

II. CITY WIDE SDC METHODOLOGY

The methodology for allocating eligible water system expenses to benefitted users is based on distributing the cost of needed capacity, as identified in the improvement fee, or surplus existing capacity, as in the reimbursement fee, to future users based on their pro rata share of the demand. The value of existing and needed future improvements are allocated to new users on a cost per gallon of peak day consumption.

There are several variables used in the methodology of cost allocation, with the most important being the "Average Maximum Daily Consumption" per equivalent 3/4" meter connection. The updated SDC methodology will continue to use the an average value of 1,200 gallons per equivalent dwelling unit for an estimate of the peak day consumption for the allocation of cost. This equates to the average of the past four year's demands.

III. SDC OVERLAY METHODOLOGY

The current SDC Improvement Fee is based on qualified public improvements that are defined as that portion of an improvement that exceeds the local government's minimum standard facility size or capacity needed to serve the particular project or property. The cost of these qualified public improvements are shared equally over all future development based on an equivalent 3/4" meter average consumption.

ORS 223.304(4) requires that a credit be available for the construction of a "qualified public improvement" if it is required as a condition of development approval, identified in the Capital Improvement Plan and either located off the development site, or on-site and required to be built larger or with greater capacity than is necessary for the particular development.

It is clear that if the improvement is off-site, the "qualified public improvement" could also include that portion required to meet the agency's minimum standard because that is the only distinction in the statute between the on-site versus off-site improvements eligible for credit. The minimum standard improvement, such as an 8" waterline, would only benefit the adjoining users and would not have any regional benefit. As a result, the cost of these improvements should only be allocated to the directly benefitted users.

The 2005 methodology revisions included the ability to establish a specific SDC Overlay to allocate directly to benefitted properties the costs of the Agency's minimum standard improvements that are:

1.) required as a condition of development approval;
2.) included in the CIP; and
3.) are not located on or contiguous to the property subject to development approval.

For the distribution system this would apply to the construction of an 8" pipeline. The benefitted properties would include all future developable properties that abut the pipeline and the costs would be allocated on a front foot basis. The equitable basis for this allocation is that in the absence of the improvement, the benefitted property owners would be mandated to construct equivalent level improvements at an inflated cost at the time of actual development.

The eligible portion of the SDC Overlay improvement cost is based on the incremental cost of the minimum standard improvement as published in the current adopted SDC Update. The overlay district should be identified in the SDC document with sufficient detail to estimate the magnitude of frontage benefitted, excluding non-developable sites. Non-developable sites include abutting areas outside the UGB, unbuildable steep slopes or previously developed property.

The requirement to pay an SDC Overlay assessment would be in addition to the cost of the City-wide SDC charge for a new connection.

IV. WATERLINE CONSTRUCTION CREDITS

ORS 223.304(4) requires that a method of credits be available for the construction of qualified public improvements. The statute further defines qualified public improvements as those *..."required as a condition of development approval, identified in the plan and list adopted pursuant to ORS 223.309 and either:*

(a) Not located on or contiguous to property that is the subject of development approval; or

(b) Located in whole or in part on or contiguous to property that is the subject of development approval and required to be built larger or with greater capacity than is necessary for the particular development project to which the improvement fee is related."

The Estacada Municipal Code is more restrictive than State Statutes in the application of credits. EMC 3.16.120.B. limits credits to the off-site waterline only. State Statutes require the EMC to also allow for credits for over-sizing of on-site waterlines therefore this credit provision should be incorporated into the EMC at the next update.

The current Estacada Municipal Code has sufficient provisions to provide credits to offset SDC fees for construction of all off-site qualified capital improvements which includes all SDC Overlay projects.

The credit for any qualified public improvement should be based on the following average values, which include the cost of public works construction, select backfill within the street right-of-way and 20% engineering expenses:

CITY OF ESTACADA
WATERLINE CONSTRUCTION CREDITS
January 2008

LINE SIZE	8"	10"	12"	14"	16"	18"
CONSTRUCTION COST	$56/lf	$68/lf	$78/lf	$88/lf	$100/lf	$110/lf
UP-SIZING CREDIT	$56/lf	$68/lf	$78/lf	$88/lf	$100/lf	$110/lf
OVERSIZE CREDIT	$0	$12/lf	$22/lf	$32/lf	$44/lf	$54/lf
OVERLAY CREDIT PER FRONT FOOT	$28/lf	$28/lf	$28/lf	$28/lf	$28/lf	$28/lf

There are three types of credits available, Up-sizing, Oversizing and Overlay. Up-sizing credits apply to the cost of the entire pipeline when mandated to replace an existing line with a larger line size to serve future demands. Oversizing credits apply to all mandated pipeline construction 10" or larger. Overlay credits apply to the component of cost associated with the first 8" diameter of any pipeline constructed as a condition of planning approval.

Note the SDC Overlay credits need to be associated with a specific area which is defined simply by the location of the pipeline. The Overlay District does not require a boundary be described and recorded. Similar to all SDCs, the overlay district would not be a lien against the property and would only become due if a benefitted property owner elected to develop to urban standards.

All water system debt is funded either through a revenue or general obligation bond issue. In theory, any new connection paying an SDC fee should be exempt from paying the cost of any debt service for the same improvement. In actuality, the amount of the interest and principle expenses is very small due to the debt service being allocated over the entire tax or rate paying base of the City.

The debt service expense is difficult to quantify and is also paid by all existing residents, including those who funded the surplus capacity initially. Not providing a credit for debt service has some inequity; However, there also exists an inequity toward the City residents to initially fund the improvement. As a result, no credit for future debt service will be permitted to offset the SDC charges.

V. WATER SYSTEM CAPITAL IMPROVEMENT PLAN

Following is a listing of needed capital improvements based on the 1993 Master Plan, SDC Methodology, the most recent periodic review and improvements identified since periodic review. The table lists the project number from the original CIP, project description, current estimate of cost, maximum day capacity, percent eligible for SDC funding and SDC cost per gallon.

The SDC anticipates adjusting all project costs according to the Engineering News Record (ENR) Construction Cost Index (CCI). The index has increased from 7415 in June 2005 to 8090 for January 2008. In addition to the escalation of costs reflected in the ENR Index, construction costs have been observed to escalate by a greater percentage in the past few years. As a result, the currant ENR index of 8,090 will be used as a current benchmark, however, the estimated costs of improvements is based on observed values in the current market.

The capacity of all system improvement in this Master Planning update and in the following CIP table is defined by the ability to meet a peak day demand of 2,000,000 gpd. To equitably allocate costs between existing customers and future connections, costs are allocated to all customers in both the improvement and reimbursement fee calculations. This equitably addresses the existing system deficiencies.

The following table is taken from the 2008 Water System Master Plan update and identifies all eligible SDC projects with the project costs per gallon based on satisfying the peak day demand.

CITY OF ESTACADA

WATER SYSTEM CAPITAL IMPROVEMENT PLAN

INCLUDING 20% CONTINGENCY AND 20% ENGINEERING

January 2008

NO.	PROJECT DESCRIPTION	ELIGIBLE COST (2008)	CAPACITY (GPD)	SDC COST PER GAL
DA	**Planning, Mapping & Inspection**	$100,000	2,000,000	$0.050
SO	**Source Improvements:**	--	--	--
1	Stage 1 Raw Water Pumps Upgrades	$35,000	2,000,000	0.018
2	Safety & Security Improvements	$28,000	2,000,000	0.014
3	Acquisition of Water Rights	$14,000	2,000,000	0.007
4	Stage 2 Raw Water Pump Improvement	$49,000	2,000,000	0.025
TR	**Treatment Improvements**	--	--	--
1	Replace Piping Between Clearwells	$35,000	2,000,000	0.018
2	Plate Settler Piping Modifications	$21,000	2,000,000	0.011
3	Replace Unit Access Ladders	$14,000	2,000,000	0.007
4	Replace Filter Media and Repaint Equipment & Piping	$0	2,000,000	0.000
5	FE & BW Pump for Units 1&2	$56,000	2,000,000	0.028
6	Security Fencing	$84,000	2,000,000	0.042
7	Office & Lab Building	$252,000	2,000,000	0.126
8a	High Service Pumps Upgrades & Pipe Modifications	$8,750	2,000,000	0.004
8b	New High Service Pump	$42,000	2,000,000	0.021
9	UV Disinfection	$210,000	2,000,000	0.105
ST	**Storage Improvements**	--	--	--
1	Existing Reservoir Security	$21,000	2,000,000	$0.011
2	Low Level 500,000 gallon Storage	$630,000	2,000,000	$0.315
3	Recoat Existing Reservoir No.2	$0	2,000,000	$0.000
4	New High Level 500,000 gallon Storage	$980,000	2,000,000	$0.490

5	Reservoir No. 1 Roof & Coating System	$0	2,000,000	$0.000
6	Recoat Existing Reservoir No.3	$0	2,000,000	$0.000
D	**Distribution Improvements:**	--	--	--
D2	Carol Street/Ginseng Upsizing	15,400	2,000,000	0.008
D3	Currin/Main/5th/3rd Upsizing	83,600	2,000,000	0.042
D4	Loop Broadway & 211 to 1st & Main	135,000	2,000,000	0.068
D5	Pierce Street Upsizing	73,400	2,000,000	0.037
D6	Ivy/Lakeshore Upsizing	133,000	2,000,000	0.067
D7	High School Fire Loop	54,600	2,000,000	0.027
D8	Ginseng Upsizing	102,700	2,000,000	0.051
D9	Broadway to Eagle Creek Road	60,000	2,000,000	0.030
D11	Upsize Hydrants	99,000	2,000,000	0.050
D13	Upsize Mill Supply Main	249,400	2,000,000	0.125
D14	Upsize Eagle Creek Main	124,600	2,000,000	0.062
D16	Miscellaneous Oversizing & Upsizing	66,600	2,000,000	0.033
D17	Pressure Reducing Valve Stations	150,000	2,000,000	0.075
	TOTAL	**$3,927,050**	--	**$1.964**

VI. SDC IMPROVEMENT FEE CALCULATION

The Improvement Fee calculation is equal to the average peak day demand per connection times the cost per gallon:

SDC Cost per EDU = (Peak Day Demand) x (Cost per Gallon)

SDC Cost per EDU = (1,200 gallons/EDU) x ($1.964/gallon)

Improvement Fee = $2,360 per EDU

VII. SDC REIMBURSEMENT FEE CALCULATION

The reimbursement fee is intended to quantify the value of existing capacity available to serve future demands. The following table lists the current value of each capital improvement completed to-date, based on actual costs adjusted to the current January 2008 ENR Construction Cost Index of 8090, or estimated value of land and improvements where actual costs were not available:

CITY OF ESTACADA
WATER SYSTEM REIMBURSEMENT FEE
January 2008

PROJECT DESCRIPTION	ORIGINAL VALUE	VALUE 1/08	CAPACITY (GPD)	SDC COST PER GAL
Water Treatment Plant Improvements, High Level Reservoir #3, Booster PS & Pipeline replacement	$3,129,887 (02)	$2,085,590*	2,000,000	$1.043
Water System Master Planning	$40,000 (93) $40,000 (07)	$102,100	2,000,000	$0.051
River Mill LID 97-01	$24,400 (01)	$28,520	2,000,000	$0.014
D10. Main St/Broadway 2nd to 6th Waterline	$53,745(04)	$56,000	2,000,000	$0.028
Cascadia Ridge On-Site Oversizing & PRV Station	$163,700 (07)	$167,000	2,000,000	$0.084
Water Treatment Plant Site and Improvements	NA	$500,000	2,000,000	$0.250
Reservoir Number 1, site and improvements	NA	$200,000	2,000,000	$0.100
Reservoir Number 2, site and improvements	NA	$200,000	2,000,000	$0.100
	TOTAL	**$2,216,211**	**TOTAL**	**$1.670**

*Original value of $3,129,887 escalated by the ENR factor of (8,090/6,538) less grants of $1,787,274.

Similar to the Improvement Fee, the reimbursement component of the SDC is the per gallon cost times peak day demand of 1,200 gallons per EDU:

SDC Cost per EDU = (Peak Day Demand) x (Cost per Gallon)

SDC Cost per EDU = (1,200 gallons/EDU) x ($1.670/gallon)

Reimbursement Fee = $2,000 per EDU

The following table is adopted with the SDC Methodology as an SDC Reimbursement Overlay to account for the off-site pipeline construction costs associated with the Cascadia Ridge Development. This accounts for the area specific costs of pipeline (8" diameter proportion only) construction that are the responsibility of the adjacent developers as opposed to the City-wide SDC. These charges are to be assessed as development occurs in the area adjacent to the pipeline, on a cost per front foot basis. These costs will be recovered as an SDC Reimbursement Fee Overlay in the specific area as the area develops.

III. SDC FEE SUMMARY

The following tables list the SDC Overlay fees which are applied on a front foot basis along the existing pipelines on the identified roadways:

CITY OF ESTACADA
WATER SDC REIMBURSEMENT OVERLAY
ASSESSED ON A FRONT FOOT BASIS
January 2008

PIPELINE LOCATION	CONSTRUCTED LENGTH	FRONT FOOT ASSESSMENT (EACH SIDE)
Moss Hill Inside UGB	1,000'	$28/lf
Coupland Road	2,790'	$28/lf
Section 21 Properties	3,300	$28/lf

Charter amendment Ballot measure 3-346, approved in November 2009, limits any City of Estacada fee to a maximum 3% increase. As a result, the proposed SDC will be limited to less than what is supported by the methodology. The Water System SDC in effect at the time of preparation of this update was $3,730. With a 3% increase, the new fee can be no more than $3,840.

The following table is a summary of the regional SDC fees that are applied to new connections or increased use of an existing connection based on meter size:

CITY OF ESTACADA
WATER SYSTEM SDC FEE SCHEDULE
January 2008

METER SIZE	EDU	IMPROVEMENT FEE	REIMBURSEMENT FEE	PROPOSED SDC	*APPROVED SDC**
3/4"	1.00	$2,360	$2,000	**$4,360**	***$3,840***
1"	1.78	$4,201	$3,560	**$7,761**	***$6,835***
1 ½"	4.00	$9,440	$8,000	**$17,440**	***$15,360***
2"	7.11	$16,780	$14,220	**$31,000**	***$27,302***
3"	16.00	$37,760	$32,000	**$69,760**	***$61,440***
4"	28.44	$67,118	$56,880	**$123,998**	***$109,210***
6"	64.00	$151,040	$128,000	**$279,040**	***$245,760***

** Approved SDC is based on 3% limitation in accordance with the Charter Amendment adopted November 2009.*